SUMMIT

BUILT-IN GAS GRILL
SB38 S

Installation Guide NG

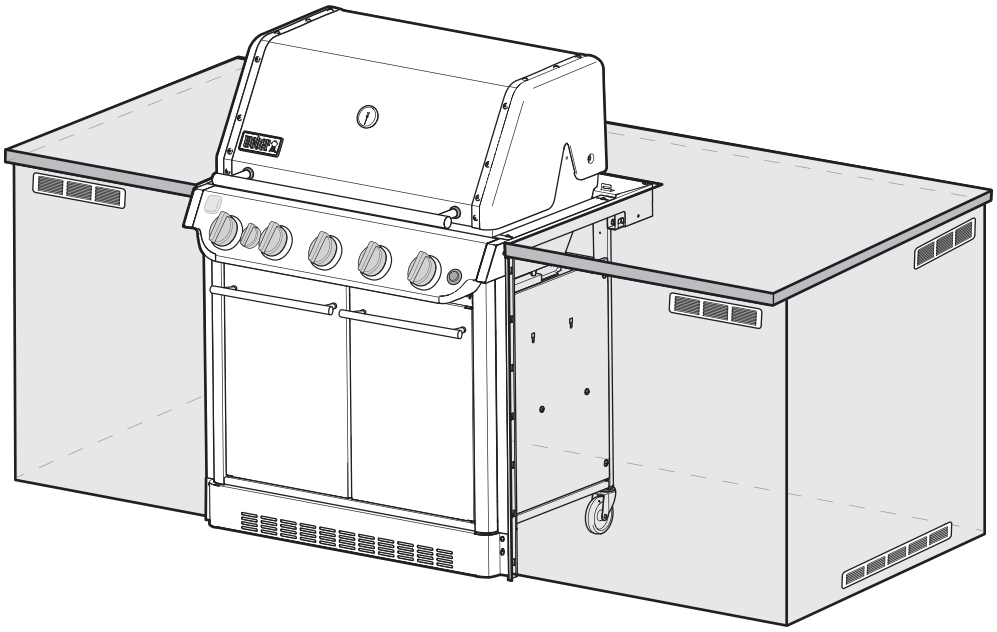

REGISTER TODAY

Register your gas grill and receive special content to make you the ultimate backyard hero.
Scan the QR Code or register online at weber.registria.com

8652245

031424
enUS

Keep this Owner's Manual for future reference, thoroughly read through it, and if you have any questions please contact us today.

Important Safety Information

DANGER, WARNING, and CAUTION statements are used throughout this Owner's Manual to emphasize critical and important information. Read and follow these statements to help ensure safety and prevent property damage. The statements are defined below.

⚠ **DANGER:** Indicates a hazardous situation which, if not avoided, ***will result in death or serious injury***.

⚠ **WARNING:** Indicates a hazardous situation which, if not avoided, ***could result in death or serious injury***.

⚠ **CAUTION:** Indicates a hazardous situation which, if not avoided, ***could result in minor or moderate injury***.

⚠ DANGER

If you smell gas:

- **Shut off gas to the appliance (grill).**
- **Extinguish any open flame.**
- **Open lid.**
- **If odor continues, keep away from the appliance (grill) and immediately call your gas supplier or your fire department.**

⚠ WARNING

- **Do not store or use gasoline or other flammable liquids or vapors in the vicinity of this (grill) or any other appliance.**
- **An LP cylinder (tank) not connected for use shall not be stored in the vicinity of this (grill) or any other appliance.**

USE OUTDOORS ONLY.

READ THE INSTRUCTIONS BEFORE USING THE APPLIANCE (GRILL).

NOTICE TO INSTALLER: These instructions must be left with the consumer.

NOTICE TO CONSUMER: Retain these instructions for future reference.

Installation and Assembly

⚠ DANGER: This grill is not intended to be installed in or on recreational vehicles or boats.

⚠ WARNING: Do not use this grill unless all parts are in place and the grill was properly assembled according to the assembly instructions.

⚠ WARNING: Do not modify the appliance (grill). Liquid propane gas is not natural gas. The conversion or attempted use of natural gas in a liquid propane gas unit or liquid propane gas in a natural gas unit is unsafe and will void your warranty.

- **WE RECOMMEND THAT THE INSTALLATION OF THIS NATURAL GAS GRILL BE PERFORMED BY A PROFESSIONAL.**
- Confirm that the branch supply line from the house to the grill is properly installed before using the grill.
- In the United States, installation must conform with local codes or, in the absence of local codes, with either the National Fuel Gas Code, ANSI Z223.1/NFPA 54, Natural Gas and Propane Installation Code, CSA B149.1; or Propane Storage and Handling Code, B149.2; or the Standard for Recreational Vehicles, ANSI A119.2/NFPA 1192, as applicable.
- In Canada, the installation of this grill must comply with local codes and/or the latest edition of Standard CAN/CSA-B149.2 (Propane Storage and Handling Code). These instructions, while generally acceptable, do not necessarily comply with the Canadian installation codes, particularly with piping above and below ground.
- In Mexico, if there are local codes that apply to portable gas appliances, you must comply with the latest edition of Official Mexican Standard (NOM).
- If an external electrical source is utilized (such as a rotisserie) it must be electrically grounded in accordance with local codes or, in the absence of local codes, with the National Electrical Code, ANSI/NFPA 70, or the Canadian Electrical Code, Part 1, CSA C22.1.

Operation

⚠ DANGER: Only use the grill outdoors in a well-ventilated area. Do not use in a garage, building, breezeway, tent, any other enclosed area, or beneath overhead combustible construction.

- An appliance is considered to be outdoors if installed with shelter no more inclusive than with walls on three sides, but with no overhead cover; all openings must be permanently open; sliding doors, garage doors, windows, or screened openings are not considered as permanent openings.
- An appliance is considered to be outdoors if installed with shelter no more inclusive than within a partial enclosure that includes an overhead cover and no more than two sidewalls. The sidewalls may be parallel, as in a breeze-way, or at right angles to each other; all openings must be permanently open; sliding door, garage doors, windows, or screened openings are not considered as permanent openings.
- An appliance is considered to be outdoors if installed with shelter no more inclusive than within a partial enclosure that included an overhead cover and three sidewalls, as long as 30% or more of the horizontal periphery of the enclosure is permanently open. All openings must be permanently open; sliding doors, garage doors, windows, or screened openings are not considered as permanent openings.
- For Built-in outdoor cooking gas appliances: If appliance is installed under overhead combustible con-struction, the appliance must be installed in conjunction with a suitable UL 710- or ULC S646- approved heavy duty vent hood only. The vent hood must be in operation when the grill is in use.
- The minimum ambient operating temperature for safe use of the appliance shall be 0° F (-17° C).

⚠ DANGER: Do not use the grill in any vehicle or in any storage or cargo area of any vehicle. This includes, but is not limited to, cars, trucks, station wagons, mini-vans, sport utility vehicles, recreational vehicles, and boats.

⚠ DANGER: Do not use the grill within 24 inches (61 cm) of combustible materials. This includes the top, bottom, back and sides of the grill.

⚠ DANGER: Keep the cooking area clear of flammable vapors and liquids such as gasoline, alcohol, etc., and combustible materials.

⚠ DANGER: This appliance (grill) must be kept away from flammable materials during use.

⚠ DANGER: Do not put a grill cover or anything flammable on, or in the storage area under the grill while it is in operation or is hot.

⚠ DANGER: Should a grease fire occur, turn off all burners and leave lid closed until fire is out.

⚠ WARNING: Accessible parts may be very hot. Keep young children away.

⚠ WARNING: The use of alcohol, prescription drugs, non-prescription drugs, or illegal drugs may impair the consumer's ability to properly and safely assemble, move, store, or operate the grill.

⚠ WARNING: Never leave the grill unattended during pre-heating or use. Exercise caution when using this grill. The entire cookbox gets hot when in use.

⚠ WARNING: Do not move the appliance (grill) during use.

⚠ WARNING: Keep any electrical supply cord and the fuel supply hose away from any heated surfaces.

⚠ CAUTION: This product has been safety-tested and is only certified for use in a specific country. Refer to country designation located on outside of box.

- Do not use charcoal or lava rock in the grill.
- This natural gas grill is factory built to operate using natural gas only. Never attempt to operate your grill on gases other than the type specified on the grill rating plates.

Storage and/or Nonuse

⚠ WARNING: Turn off the gas at the natural gas supply valve when the grill in not in use.

⚠ WARNING: After a period of storage and/or nonuse, the grill should be checked for gas leaks and burner obstructions before use.

- Storage of the grill indoors is permissible only if the grill is disconnected from the gas supply.

California Proposition 65

⚠ WARNING: Combustion byproducts produced when using this product contain chemicals known to the state of California to cause cancer, birth defects, or other reproductive harm.

⚠ **PROPOSITION 65 WARNING:** Handling the brass material on this product exposes you to lead, a chemical known to the state of California to cause cancer, birth defects, or other reproductive harm. *Wash hands after handling this product.*

Electrical Supply

⚠ WARNING: This appliance is not intended for use by persons (including children) with reduced physical, sensory or mental capabilities, or lack of experience and knowledge, unless they have been given supervision or instruction concerning use of the appliance by a person responsible for their safety.

⚠ WARNING: Children should be supervised to ensure that they do not play with the appliance.

⚠ WARNING: Only use the power supply unit provided with this appliance.

⚠ WARNING: This appliance incorporates an earth connection for fuctional purposes only.

⚠ WARNING: To protect against risk of electric shock, do not immerse cord or plugs in water or other liquid.

⚠ WARNING: Unplug from outlet when not in use and before cleaning. Allow to cool before putting on or taking off parts.

⚠ WARNING: Do not opperate any outdoor cooking gas appliance with a damaged cord, plug, or after the appliance malfunctions or has been damaged in any manner. Contact the Customer Service Representative in your area using the contact information on our web site. Log onto www.weber.com.

⚠ WARNING: Do not let the cord hang over the edge of a table or touch hot surfaces.

⚠ WARNING: Do not use an outdoor cooking gas appliance for purposes other than intended.

⚠ WARNING: When connecting, first connect the plug to the outdoor cooking gas appliance then plug appliance into the outlet.

⚠ WARNING: Use only a Ground Fault Interrupter (GFI) protected circuit with this outdoor cooking gas appliance.

⚠ WARNING: Never remove the grounding plug or use with an adapter of 2 prongs.

⚠ WARNING: Use only extension cords with a 3 prong grounding plug, rated for the power of the equipment, and approved for outdoor use with a W-A marking.

- Do not connect two or more extension cords together.

Configuration Options

Recommended Gas Supply Locations

There are several configuration options for the grill and gas supply access of your Island structure.

The 3 common options (A, B, C) are illustrated in the 'Island' Structure Configuration Options" table.

If there are local codes that apply to "built-in" gas grills, you will have to conform to them. Installation must conform with local codes or, in the absence of local codes, with the National Code as applicable.

When using a gas supply system in an enclosure, ventilation must be provided. Gas vapor is highly explosive and can cause serious bodily injury or damage to property if allowed to accumulate in a confined space and ignited.

Recommended Construction Materials

We recommend that the construction and installation of this grill is in a masonry structure and carried out by a professional tradesperson. Masonry such as stone or brick, and noncombustible countertops such as marble or granite, is preferred. Other noncombustible material along with metal studs may also be used.

IMPORTANT: Wood or other combustible material are not acceptable for the construction of the grill structure.

NOTE: Contact your local municipality for building codes regulating outdoor gas grill installations.

Ventilation

Ventilation holes can be located in a low visibility area and should be protected by screening material to prevent rodents and insects from entering the structure. Air holes will also help dry moisture.

NOTE: These drawings are only a reference.

- Cross ventilation must be incorporated in the supporting structure. We recommend a minimum of 100 square inches (254 square cm) of venting per side.
- Vents should be on two sides of the structure.
- The drawings are for reference only.
- Position the vents at both the bottom of the structure and at the top of the structure.
- The bottom vents should be as close to ground level as possible. Make sure the vent area is not blocked by interior supports of the structure.
- We recommend vents with screens.
- Access doors to the structure are not considered vents.
- Clean the vents periodically.

"ISLAND" STRUCTURE CONFIGURATION OPTIONS

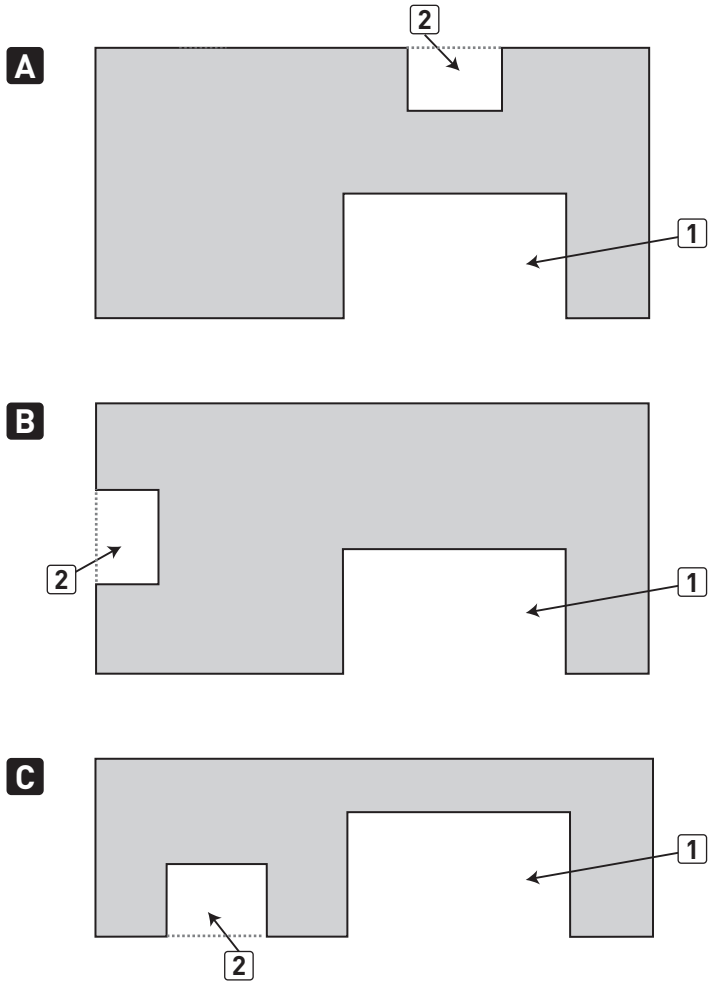

1	Built-In grill
2	Gas supply

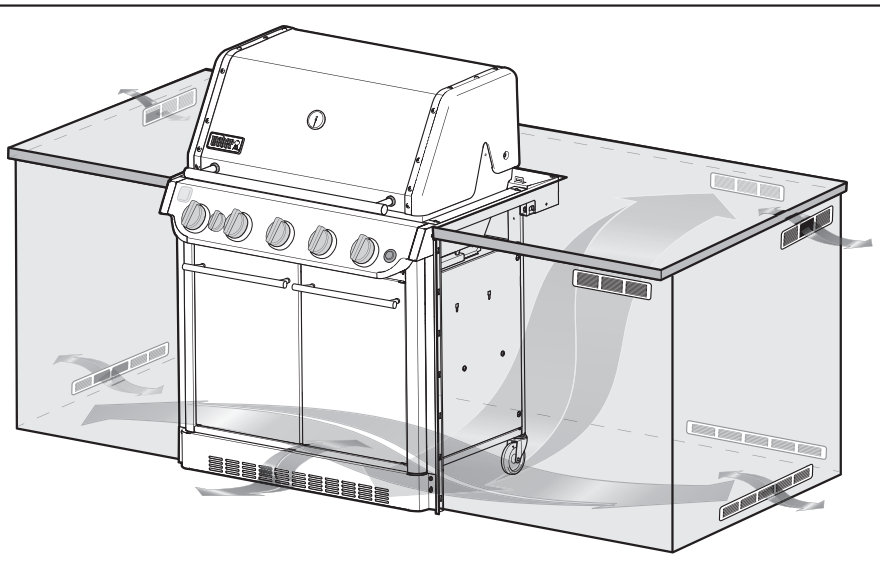

⚠ DANGER: Failure to follow recommended minimum ventilation instructions can cause gas to collect in the structure in the event of a gas leak. This may result in a fire or an explosion which can cause serious bodily injury or death, and damage to property.

⚠ WARNING: Ventilation openings must be provided in the structure, with at least one mounted high and at least one mounted low, to provide cross ventilation in the event of a gas leak.

⚠ WARNING: Keep the ventilation openings of the enclosure free and clear of debris.

General Construction

The SUMMIT Built-In unit should be on site before construction begins.

For ease of installation, the grill will be pushed on its casters into the built-in structure.

The installation of this grill requires a level floor pad surface **(1)** and countertop surface. The floor pad surface must be constructed from solid materials and must be level and smooth. Proper subgrade materials must be used under the floor pad to prevent materials from settling and heaving.

Rotisserie Outlet

If the supporting structure is going to have an electrical outlet for a rotisserie (sold separately), it should be on the right side of the structure.

Built-In Structure Cutout Dimensions

All dimensions are to finished surfaces.

All countertop finished surfaces must be constructed of a noncombustible material.

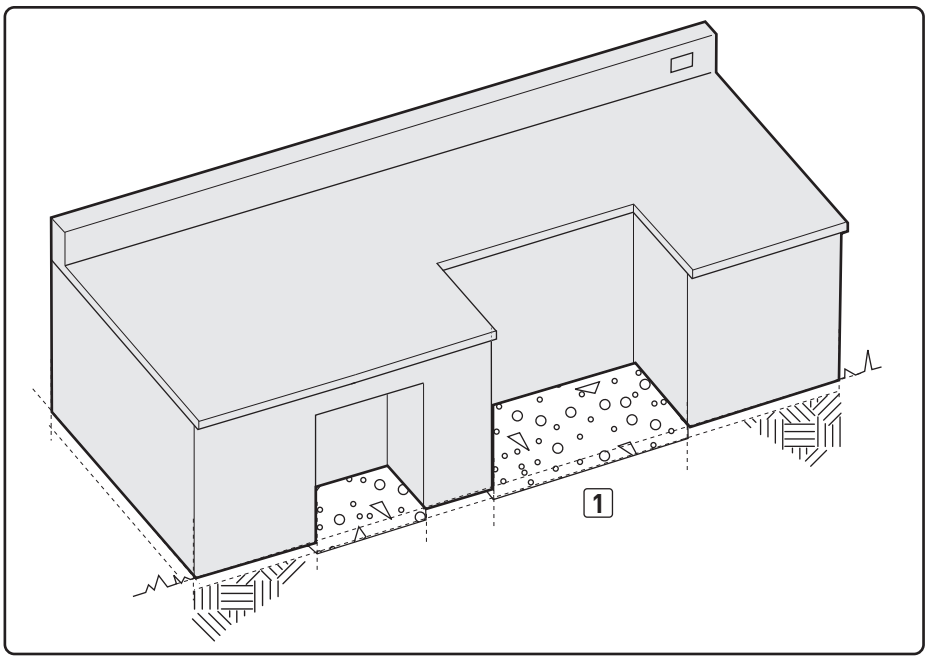

GRILL DIMENSIONS

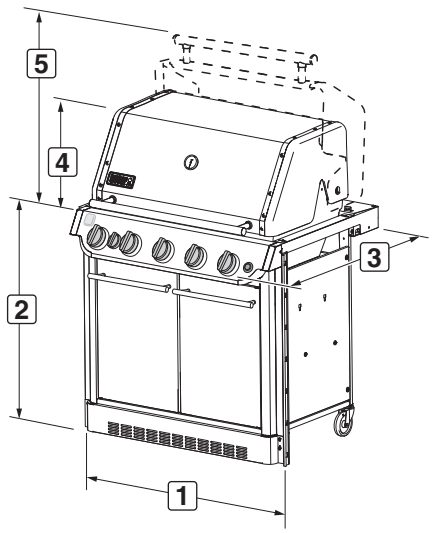

	E/S
1	41" (1041 mm)
2	36 ⅜" (924 mm)
3	31 ½" (800 mm)
4	17" (432 mm)
5	24 ½" (622 mm)

BUILT-IN CUTOUT GENERAL DIMENSIONS

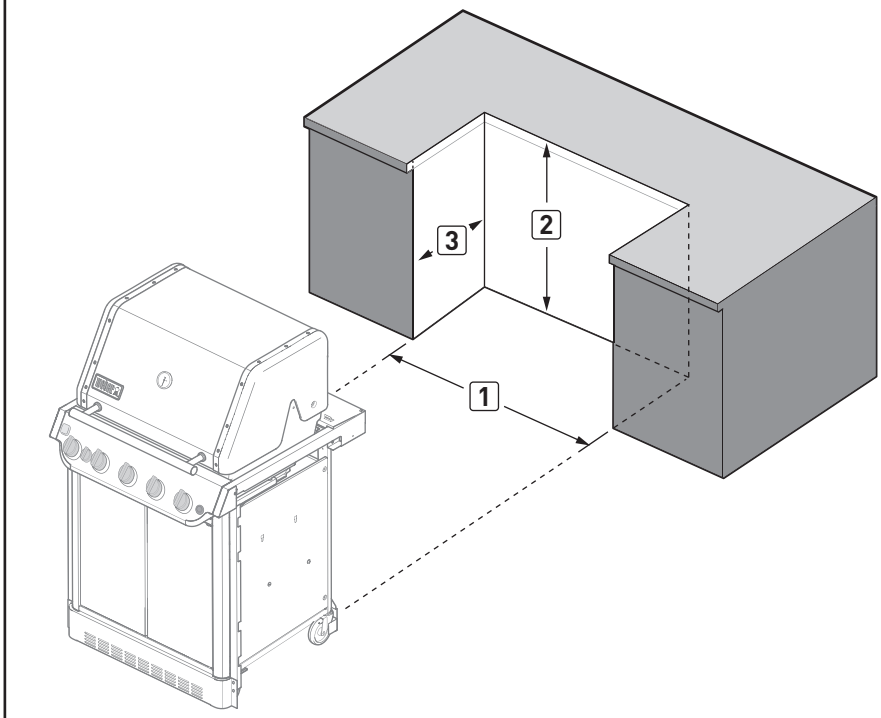

	E/S	TOLERANCES
1	41 ¼" (1048 mm)	±¼" (6 mm)
2	36" (914 mm)	max
3	26 ¼" (667 mm)	±⅛" (3 mm)

Positioning Your Grill

When determining a suitable location for your grill installation, give thought to concerns such as exposure to wind, proximity to traffic paths, and keeping any gas supply lines as short as possible. Never locate the grill in a garage, breezeway, or shed, under an unprotected overhang, or in any other enclosed area. The grill must not be installed under overhead combustible construction. Position the grill and structure so there is enough room to safely evacuate the area in case of a fire.

- For Built-in outdoor cooking gas appliances: If appliance is installed under overhead combustible construction, the appliance must be installed in conjunction with a suitable UL 710- or ULC S646- approved heavy duty vent hood only. The vent hood must be in operation when the grill is in use.

Clearance From Combustible Materials

Clearance dimensions indicate the minimum allowable distance from the edge of the grill to any combustible materials.

The cut-out structure, countertops, and adjacent work areas for the Built-In grill installation must be built from noncombustible materials only.

NOTE: If you have questions on which materials are considered noncombustible, contact your local building materials supplier or fire department.

Clearance From Noncombustible Materials

If your installation is to be adjacent to walls, only noncombustible materials must be used.

The cut-out structure, countertops, and adjacent work areas for the built-in grill installation must be constructed from noncombustible materials only.

NOTE: If you have questions on which materials are considered noncombustible, contact your local building materials supplier or fire department.

CLEARANCES FROM COMBUSTIBLE MATERIALS

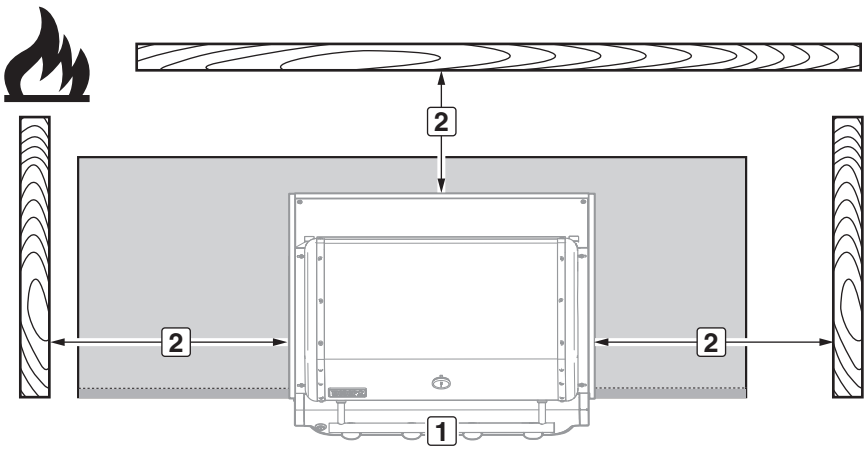

1	Barbecue
2	24" (610 mm) from edge of barbecue to any combustible surface

⚠ WARNING: The structure, countertops, and adjacent work areas for the built-in grill installation must be constructed from noncombustible materials only.

Planning the Gas Supply Location

Built-In Gas Line Location

A 58 inch (147 cm) main corrugated gas line is connected to the manifold of the grill. Build an opening for the corrugated gas line to pass through to the gas supply enclosure, where connections to the bulkhead, hose and regulator will be made.

NOTE: Leave an access in the "island" structure for gas supply and regulator service that is outside the grill cabinet.

The female quick-disconnect fitting must be installed in an easily accessible location. If this compartment is located directly adjacent to the grill unit, it must be properly vented.

Never locate the access for the quick-disconnect fitting and regulator service where it will be obstructed after installation is complete.

WEBER recommends that a manual shutoff valve also be installed in an easily accessible location.

The gas supply enclosure shall house the included hose and regulator assembly. The hose and regulator are required parts of the built-in gas grill.

A properly constructed enclosure meets the requirements for venting and separation from a heat source.

NOTE: Contact your local municipality for building codes regulating outdoor gas grill installations. You must conform to the latest edition of the local and national code as applicable.

Gas Supply Access

The area should be kept clear of sharp, jagged or extremely abrasive surfaces to avoid possible damage to gas supply lines. Exercise caution when pulling gas lines through built-in structure.

NOTE: Gas supply enclosure door not included.

General Specifications

Contact your local municipality for building codes regulating outdoor gas grill installations. In absence of Local Codes, you must conform to the latest edition of the National Fuel Gas Code: ANSI Z 223.1/NFPA 54, or CAN/CGA-B149.1, Natural Gas and Propane Installation Code. WE RECOMMEND THAT THIS INSTALLATION BE DONE BY A PROFESSIONAL.

- This grill is designed to operate at 4.0" of water column pressure (0.144365 psi).
- The quick-disconnect fitting can be installed horizontally or pointing downward, but never pointing upward. Installing it with the open end pointing upward can result in water and debris collecting in the quick-disconnect fitting.
- The dust covers (plastic plugs supplied with your grill) help keep the open ends of the quick-disconnect fitting clean while disconnected.
- A manual shut-off valve must be installed outdoors, and be accessible.
- An additional manual shut-off valve indoors should be installed in the branch fuel line in an accessible location near the supply line.
- Pipe compound that is resistant to the action of natural gas should be used when connections are made.
- The outdoor connector must be firmly attached to rigid, permanent construction.

Gas Line Piping

- If the length of the line required does not exceed 50 feet, use a ⅝" O.D. tube. One size larger should be used for

BUILT-IN GAS LINE LOCATION

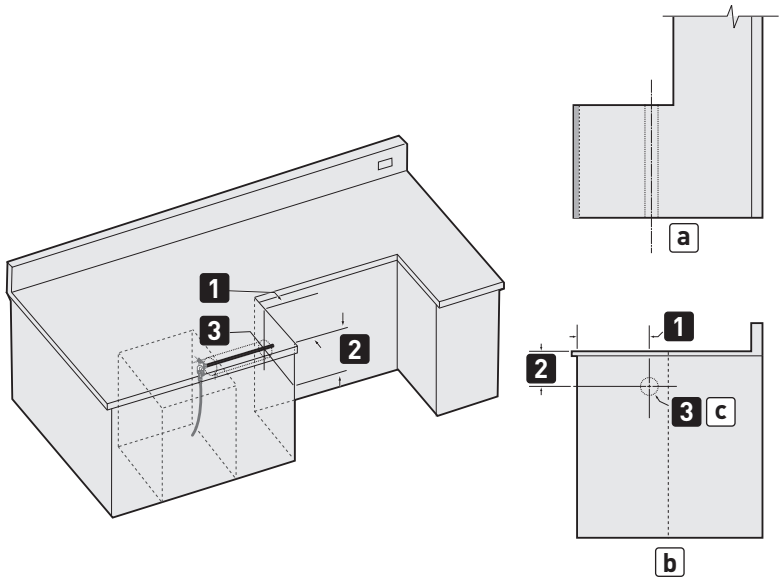

	SB38 E/S	TOLERANCES
1	12" (305 mm)	±½" (12 mm)
2	4" (102 mm)	±½" (12 mm)
3	2 ½" (64 mm)	±¼" (6 mm)
a	Plan view right	
b	Side view	
c	Gas inlet	

⚠ DANGER: Use of any other hose and regulator assembly could be dangerous, and may not provide adequate gas supply to the gas barbecue, and could result in a fire or an explosion causing serious bodily injury or death and damage to property.

⚠ DANGER: Do not use a flame to check for gas leaks. Be sure there are no sparks or open flames in the area while you check for leaks.

⚠ DANGER: Leaking gas may cause a fire or explosion.

⚠ DANGER: Do not operate the barbecue if there is a gas leak present.

⚠ CAUTION: If young children are in the area, a locking valve should be considered.

lengths greater than 50 feet.
- Gas piping may be copper tubing, type K or L; polyethylene plastic tube, with a minimum wall thickness of .062"; or standard weight (schedule 40) steel or wrought iron pipe.
- Copper tubing must be tin-lined if the gas contains more than 0.3 grams of hydrogen sulfide per 100 cubic feet of gas.
- Plastic tubing is suitable only for outdoor, underground use.
- Gas piping in contact with earth, or any other material which may corrode the piping, must be protected against corrosion in an approved manner.
- Underground piping must have a minimum of 18" cover.

Hose Requirements

- The grill is equipped with a model specific hose that was attached during the manufacturing process. This specific hose must be used for proper performance.
- If the hose becomes worn or damaged, contact the Customer Service Representative in your area using the contact information on our website.

Pressure Testing the Gas Supply

- Disconnect the gas grill when the gas supply is being tested at high pressures. This appliance and its individual shutoff valve must be disconnected from the gas supply piping system during any pressure testing of that system at test pressures in excess of 1/2 psig (3.5 kPa).
- Turn off the gas grill when the gas supply is being tested at low pressures. This appliance must be isolated from the gas supply piping system by closing its individual manual shutoff valve during any pressure testing of the gas supply piping system at test pressures equal to or less than 1/2 psig (3.5 kPa)

Connection Testing

All connections and joints should be thoroughly tested for leaks in accordance with local codes. Follow the leak test procedures in your Owner's Manual.

Mounting the Bulkhead

Securely mount the bulkhead bracket to the side of the built-in gas supply enclosure using non-corrosive hardware. **MOUNTING HARDWARE NOT INCLUDED.**

Typical NG Grill Pipe Installation

INSIDE HOUSE

- **A** Gas supply
- **B** Shutoff

OUTSIDE HOUSE

- **C** 1/2" Quick-disconnect
- **D** 1/2" pipe nipple
- **E** Locking shutoff

Local codes may require different installations.

Flare fittings should never be used.

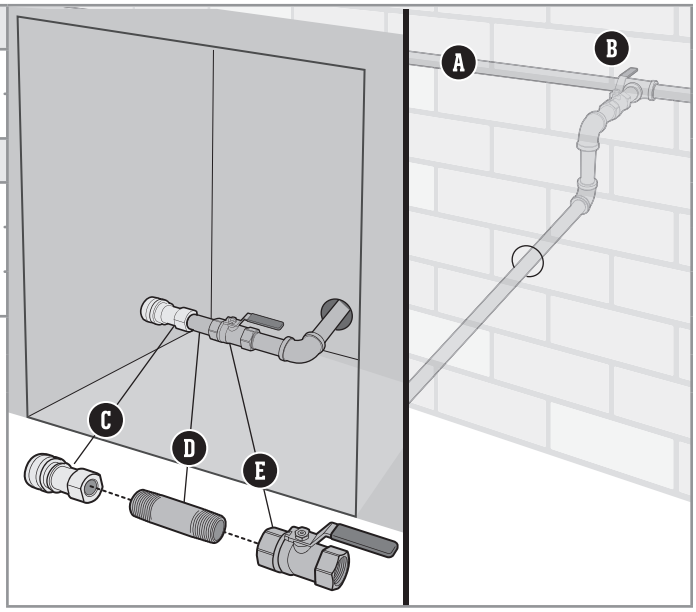

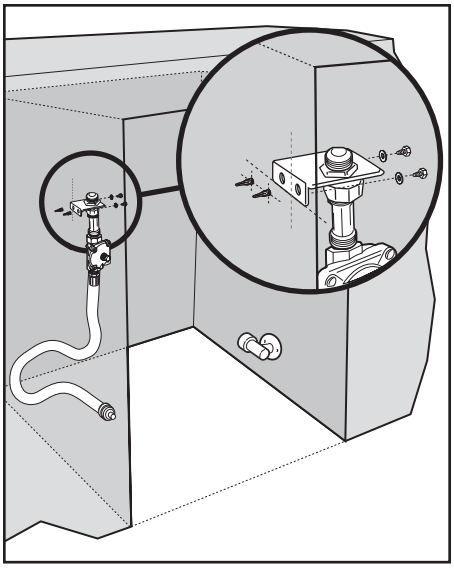

BUILT-IN CUTOUT DETAILED DIMENSIONS - LOCATING THE STRUCTURE NEAR A COMBUSTIBLE WALL

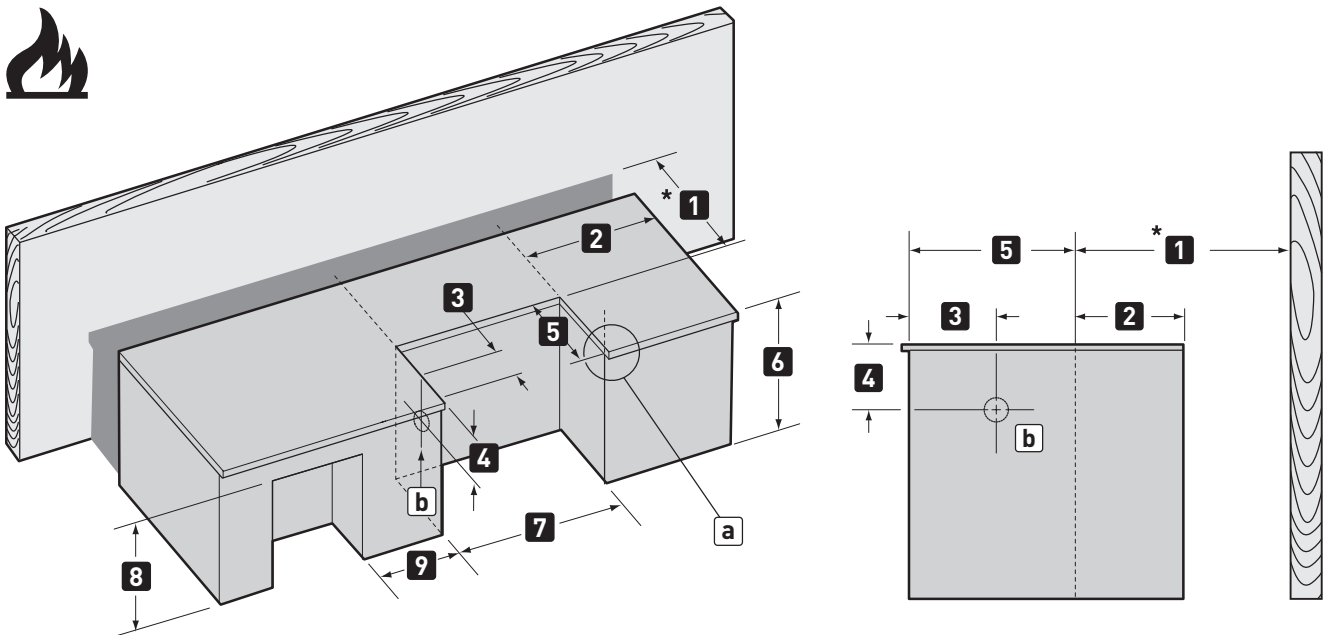

		SB38 E/S
DIMENSIONS	*1	24" (610 mm) minimum* Minimum from cutout edge to combustible construction.
	2	0" (0 mm) minimum**
	3	12" (305 mm)
	4	4" (102 mm)
	5	26 ½" (673 mm)
	6	36" (914 mm) maximum
	7	41 ½" (1054 mm)
	8	24" (610 mm) minimum for 20 lb LP cylinder only
	9	¾" (19 mm) minimum**
	a	For a countertop treatment: recommended ¾" (19 mm) overhang
	b	Gas inlet
		*Clearance from any combustible surface or structure is at least 24" (610 mm) from the back and sides of the barbecue. ** If the cut-out is constructed from non-combustibles.

BUILT-IN CUTOUT DETAILED DIMENSIONS - LOCATING THE STRUCTURE NEAR A NONCOMBUSTIBLE WALL

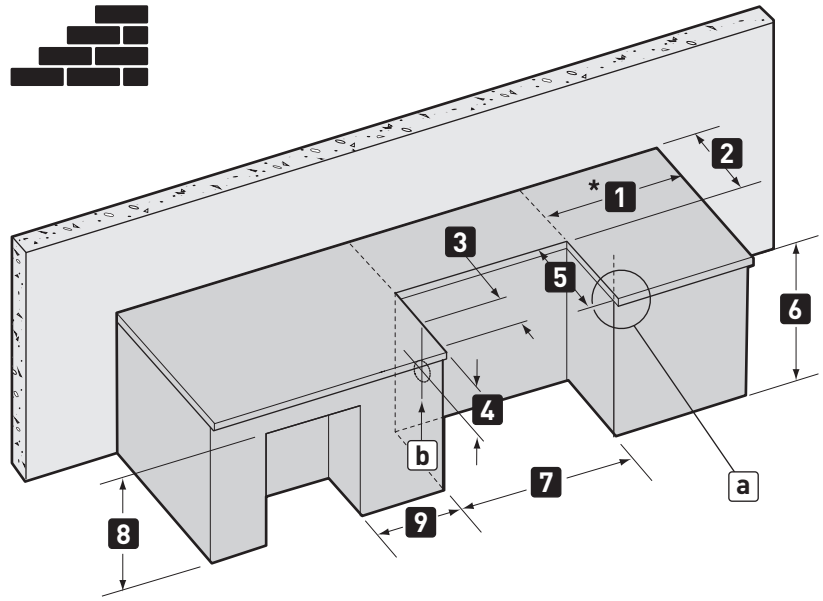

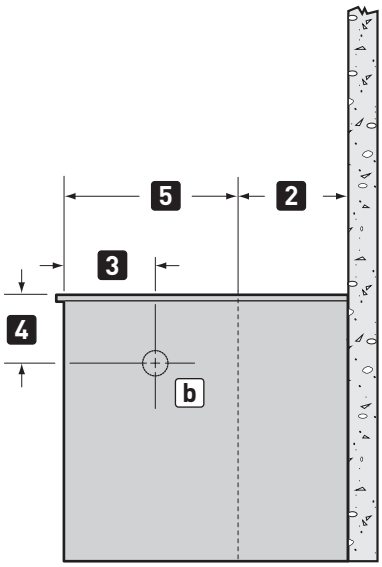

		SB38 E/S
DIMENSIONS	*1	24" (610 mm) minimum* Minimum from cutout edge to combustible construction.
	2	0" (0 mm) minimum**
	3	12" (305 mm)
	4	4" (102 mm)
	5	26 ½" (673 mm)
	6	36" (914 mm) maximum
	7	41 ½" (1054 mm)
	8	24" (610 mm) minimum for 20 lb LP cylinder only
	9	¾" (19 mm)) minimum
	a	For a countertop treatment: recommended ¾" (19 mm) overhang
	b	Gas inlet
		*Clearance from any combustible surface or structure is at least 24" (610 mm) from the back and sides of the grill. ** If the cut-out is constructed from non-combustibles.

a

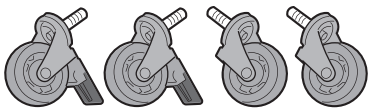

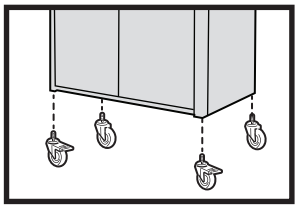

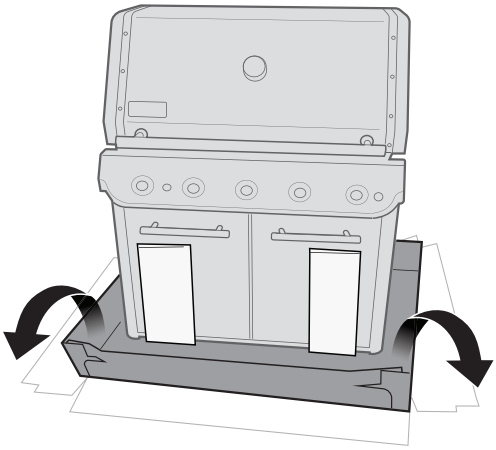

b

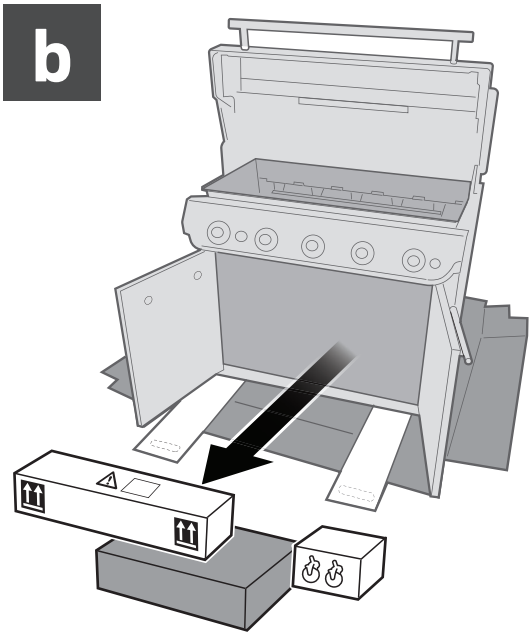

c

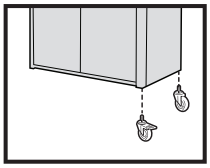



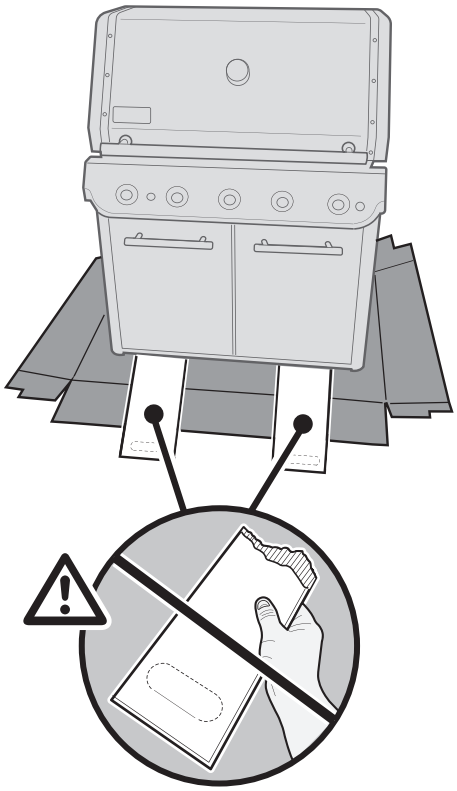

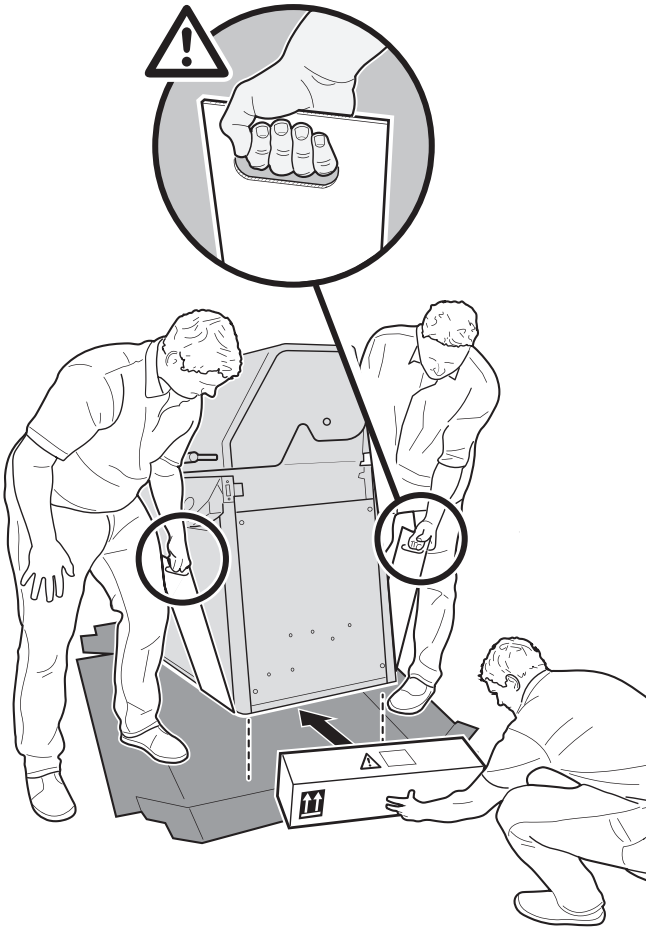

d



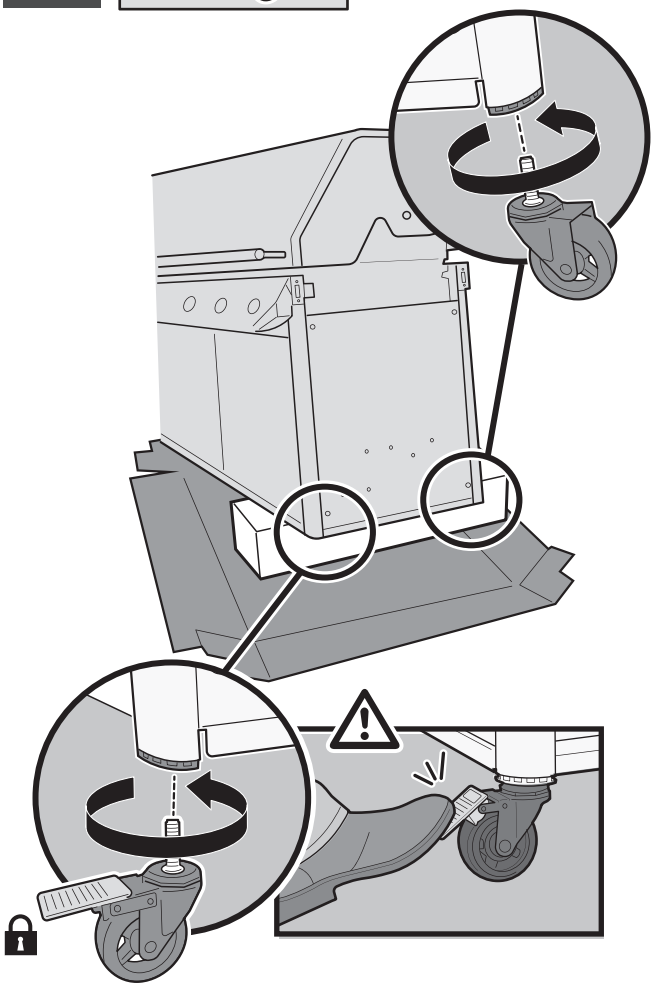

e

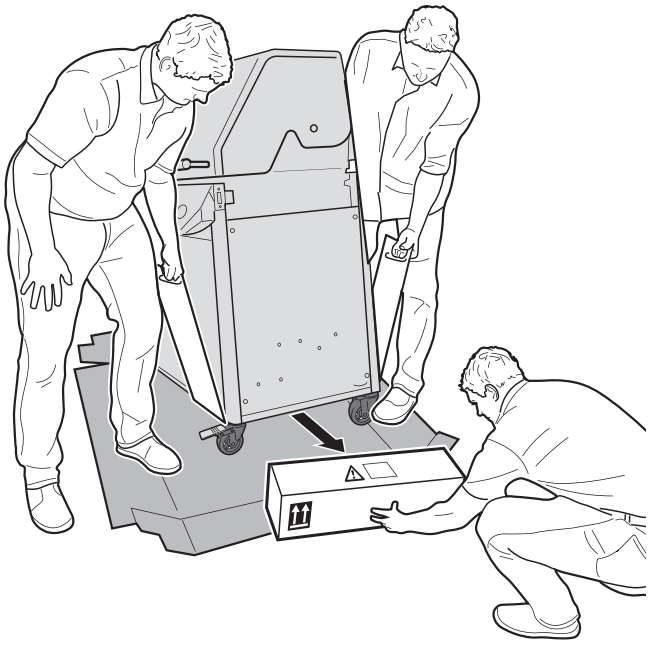

f

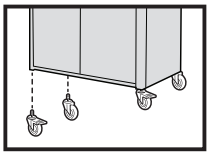

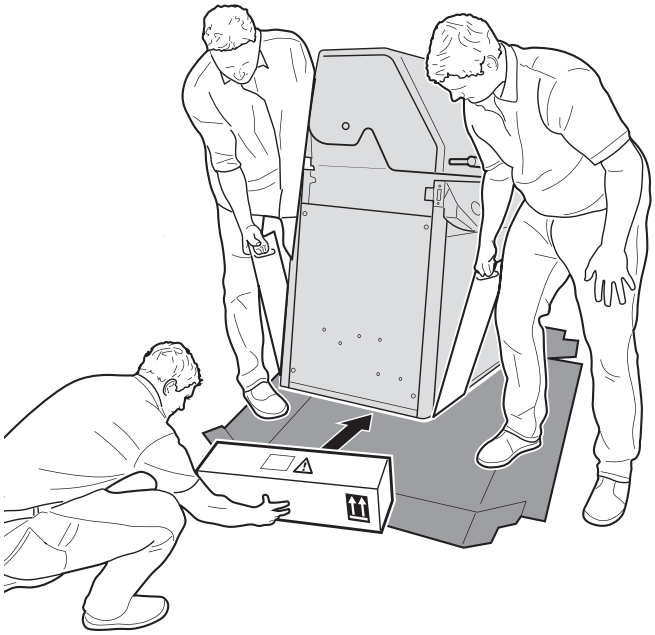

g

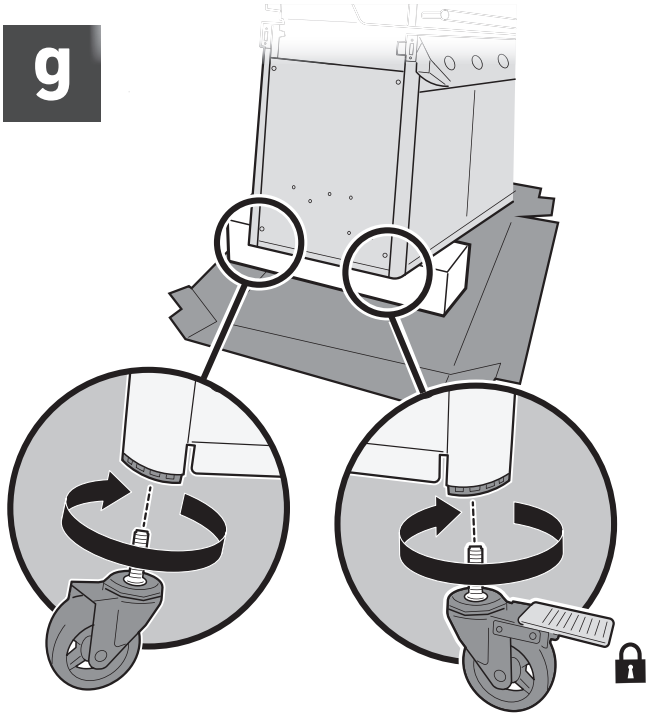

⚠ Assemble grill on a flat, level, and soft surface.

⚠ Remove protective film from stainless steel parts before installing.

⚠ Do not use power tools for assembly.

⚠ Three people required for assembly.

⚠ There may be visual differences between illustrations and model purchased.

⚠ Always keep lid closed when assembling or moving your grill.

TOOLS INCLUDED:



TOOLS REQUIRED:

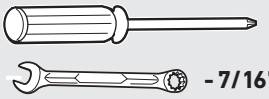

1	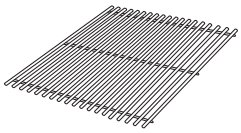
2	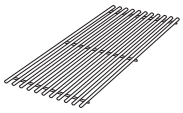
1	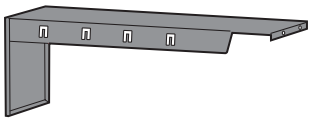
1	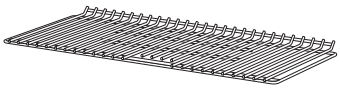
1	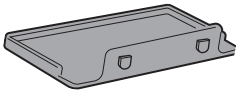
1	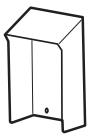

1	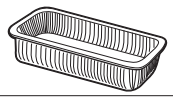
1	
1	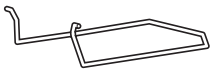
1	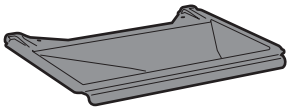
5	
4	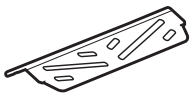
1	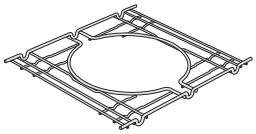
1	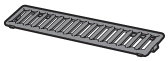
1	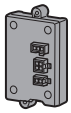
1	

1	
1	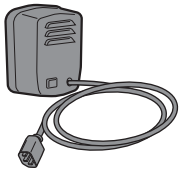
4	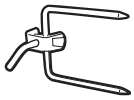
2	
2	
1	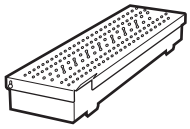
6	
3	
1	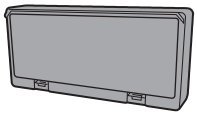
1	
1	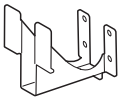

1	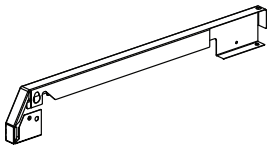
1	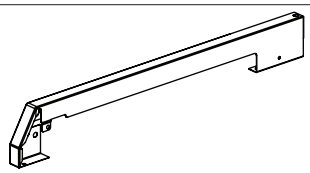
1	
1	
1	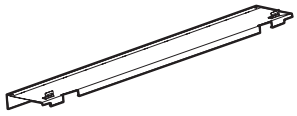
1	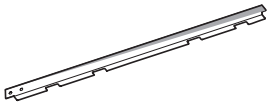
1	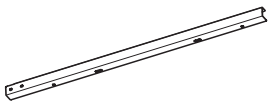
1	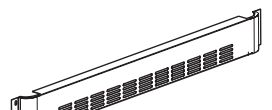
2	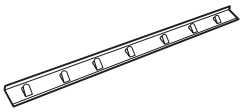
1	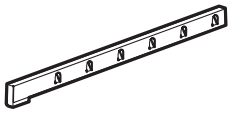
1	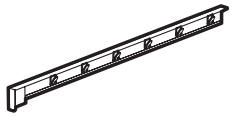
1	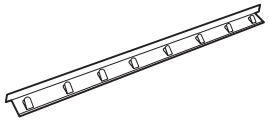

Hardware

A


-2


-4

B

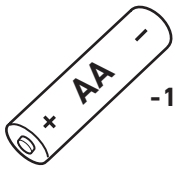
-1

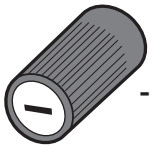
-1

C


-4


-6


-4

D

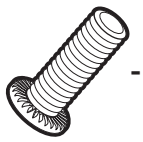
-2


-2

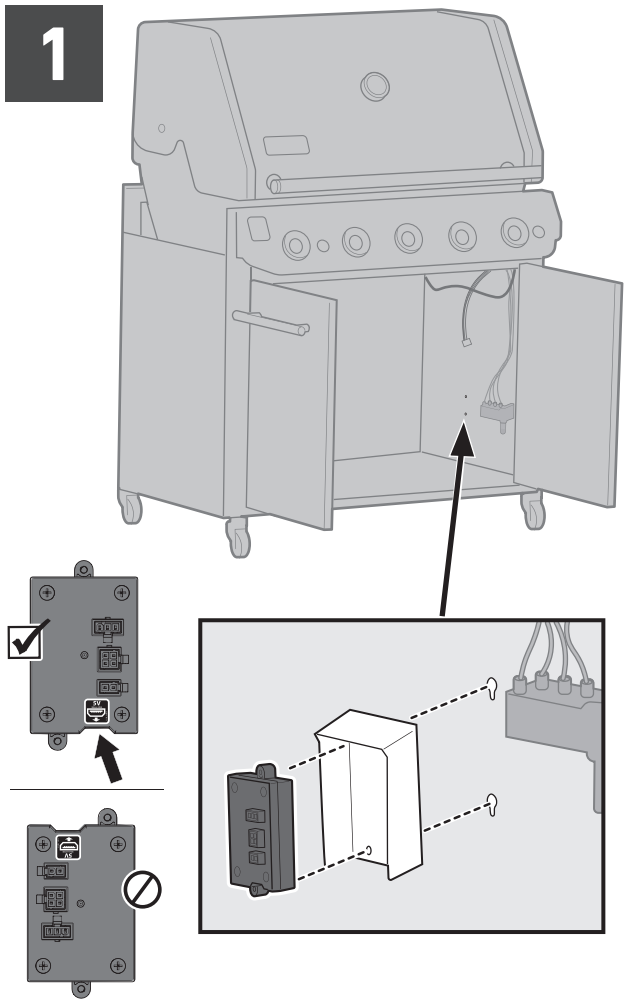
1

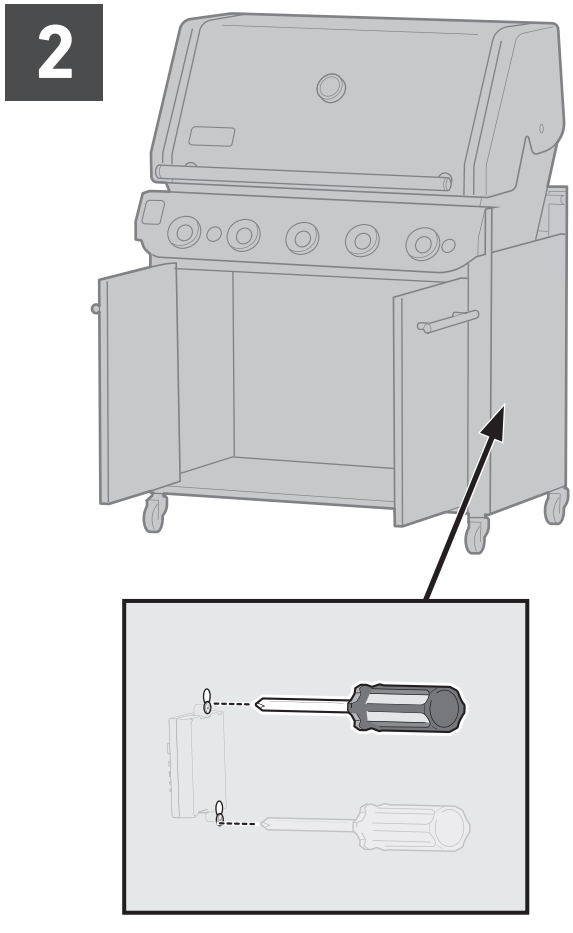
2

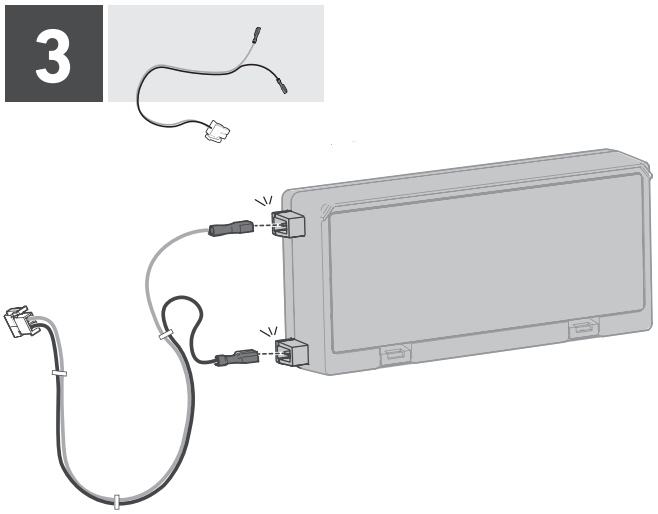
3

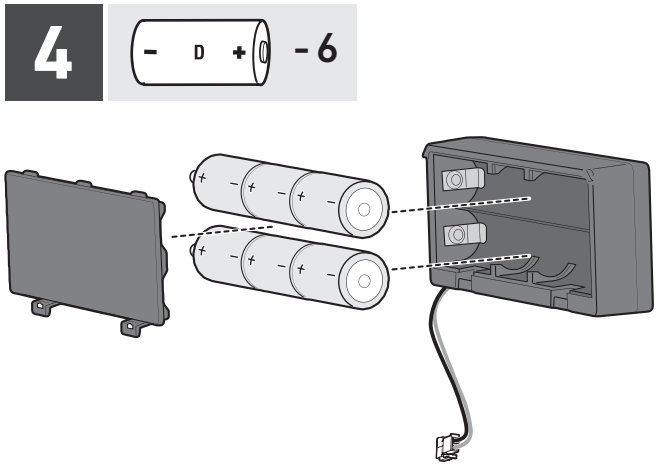
4
- D + - 6

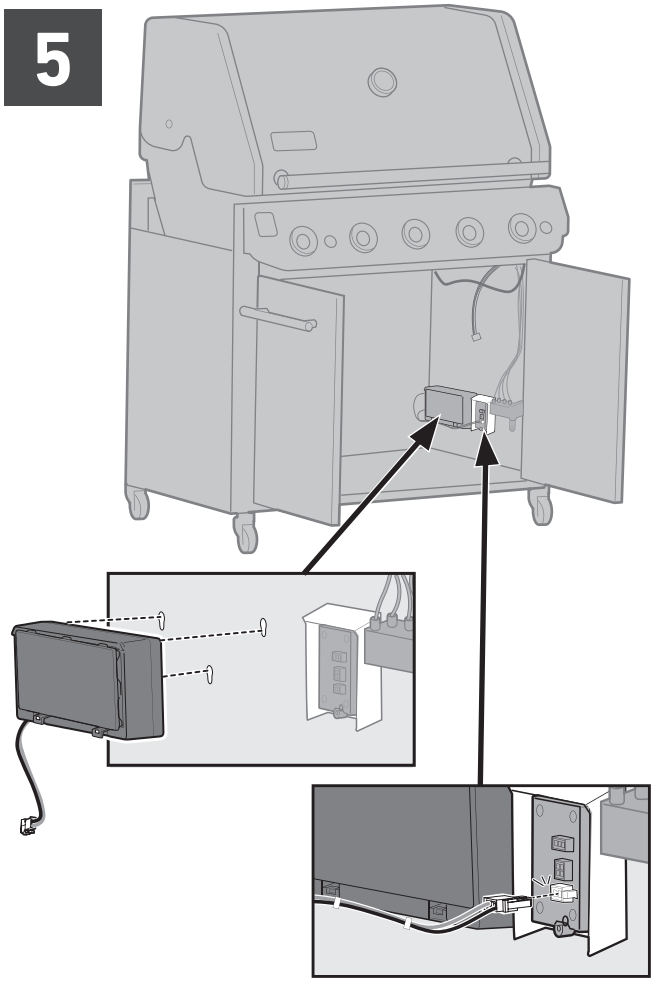
5

6

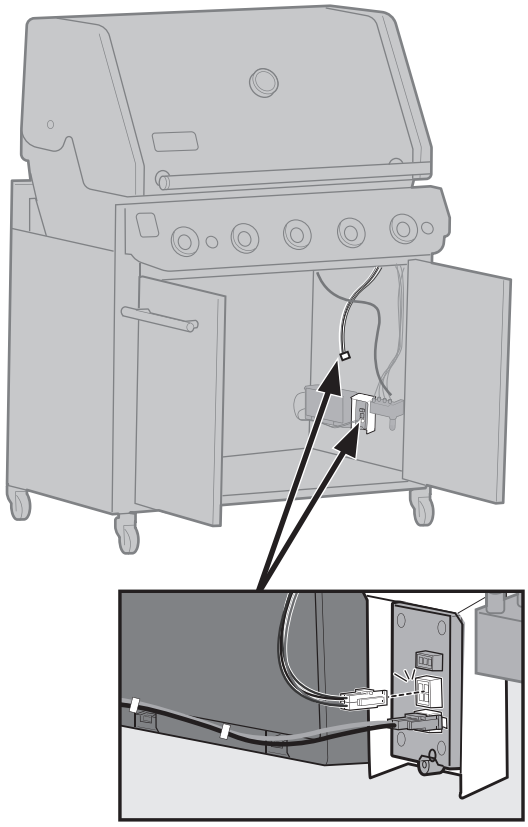

7

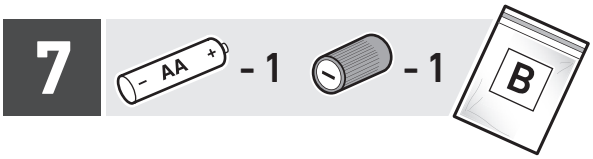

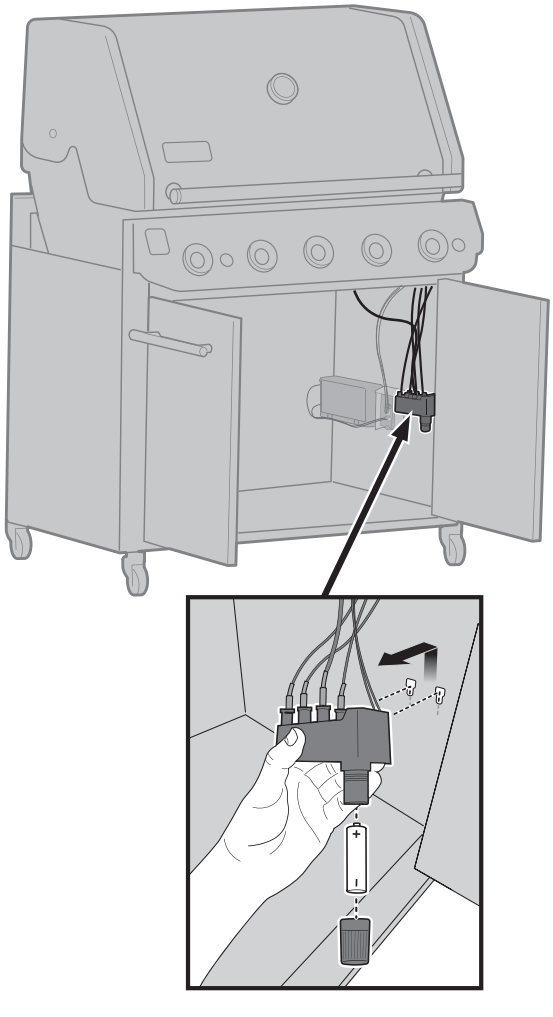

8

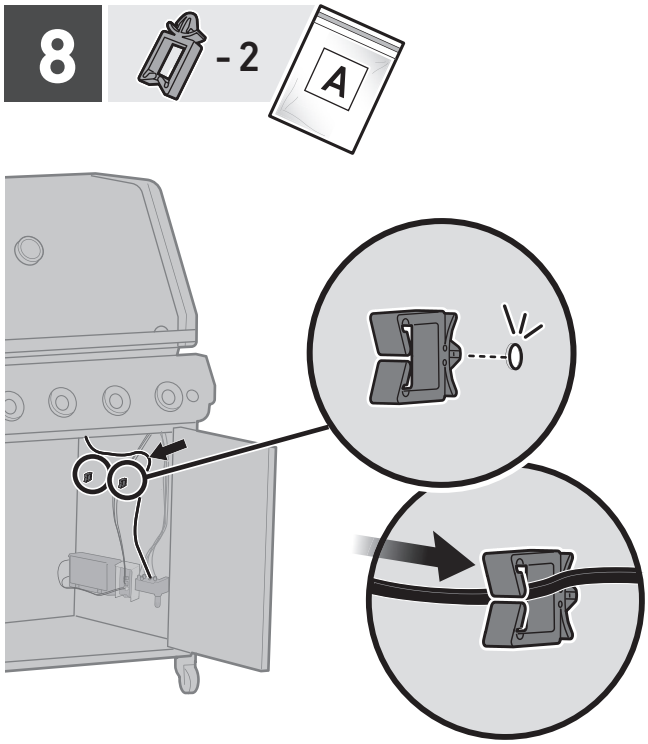

9

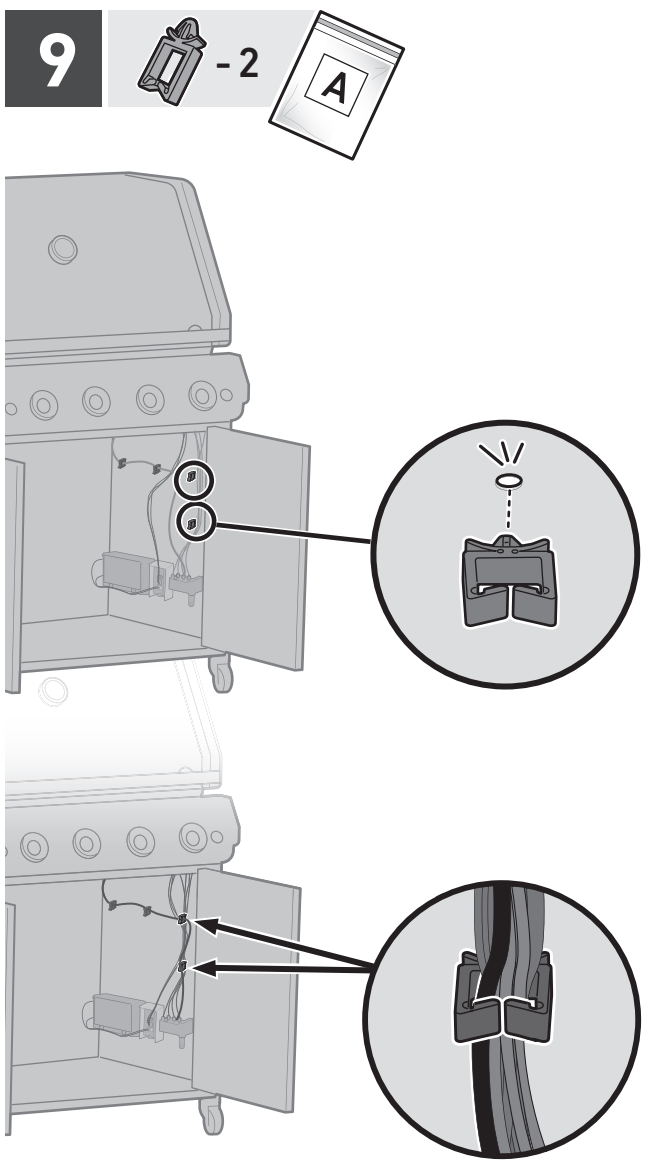

10

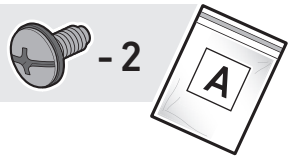

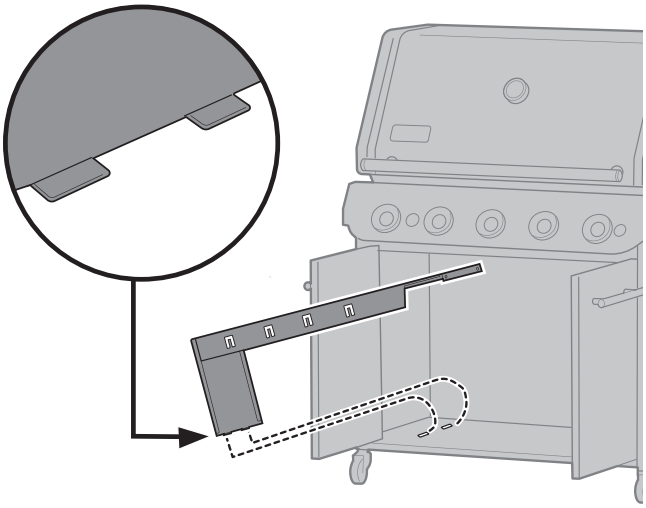

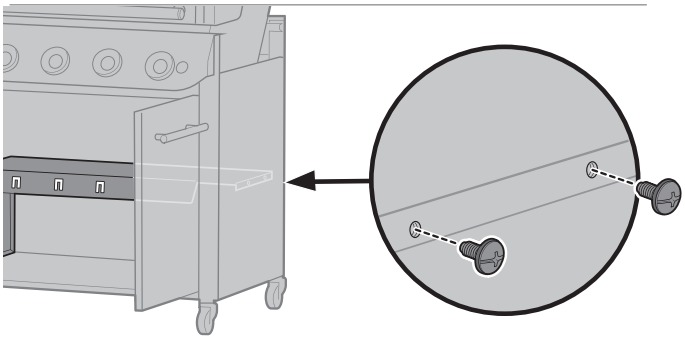

11

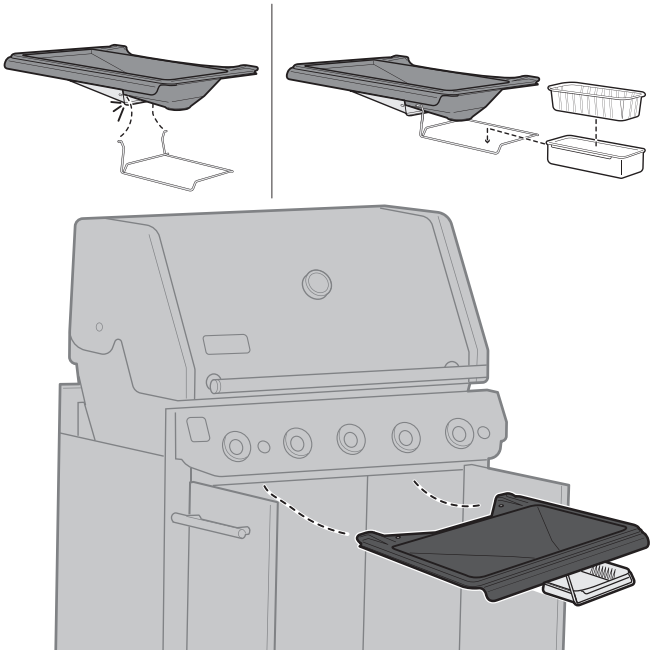

12

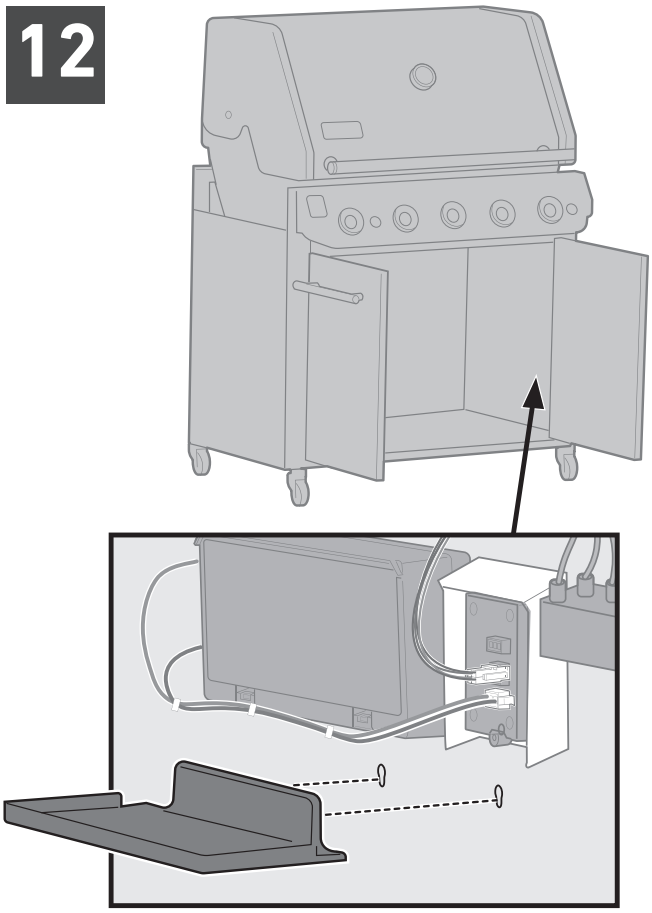

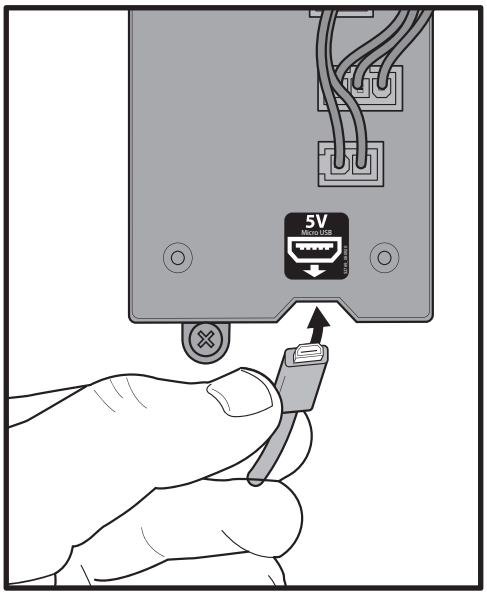

For information on using an external power bank, refer to "Connecting an External Power Bank" in the Owner's Manual.

13

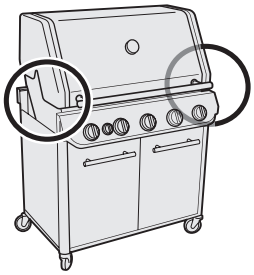

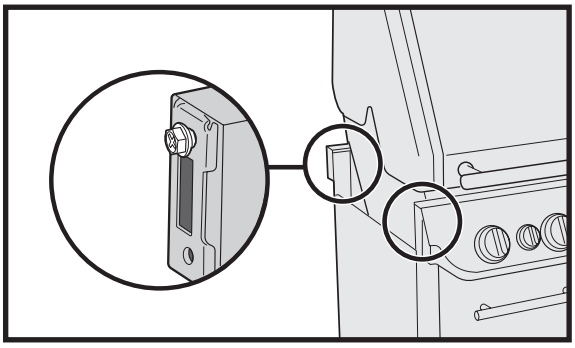

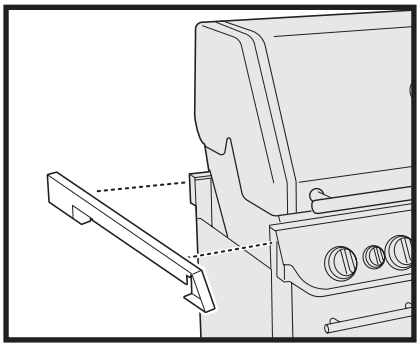

14



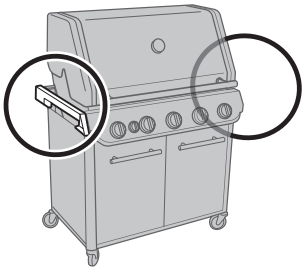

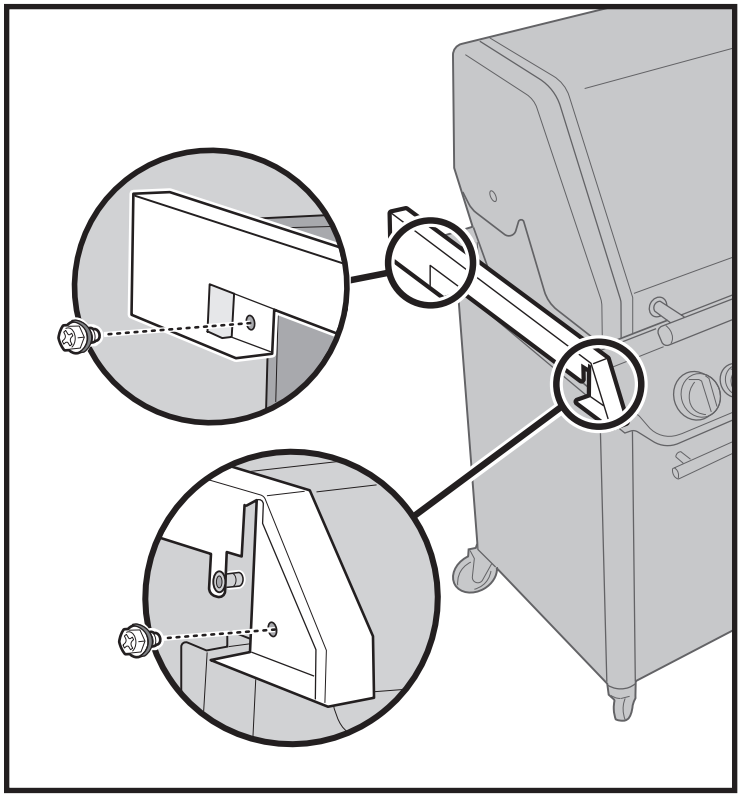

15

-4

C

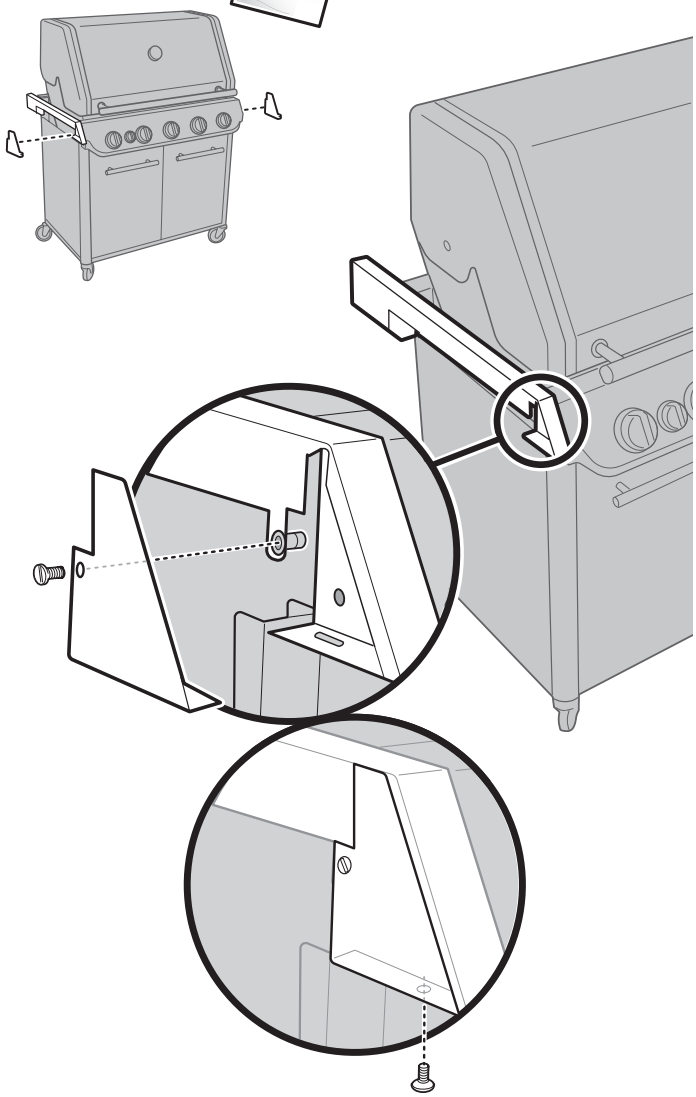

16

-2

C

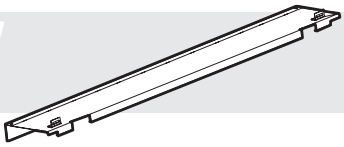

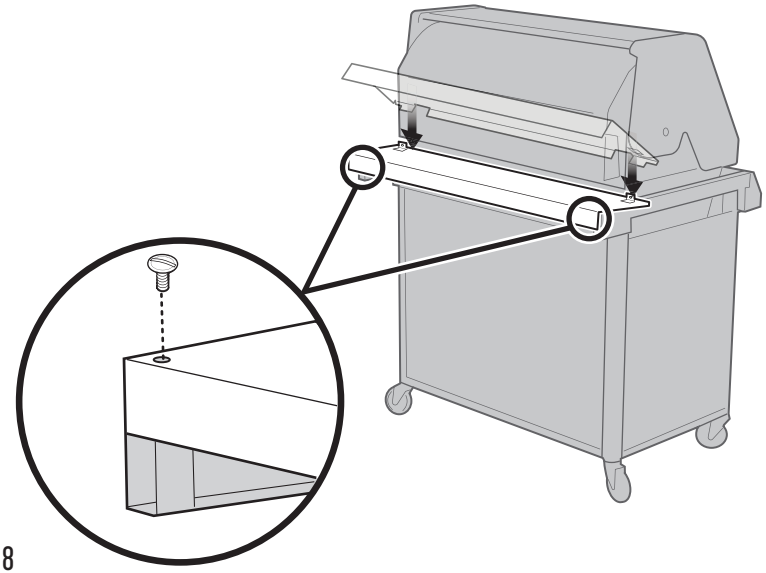

17

⚠ Save hardware.

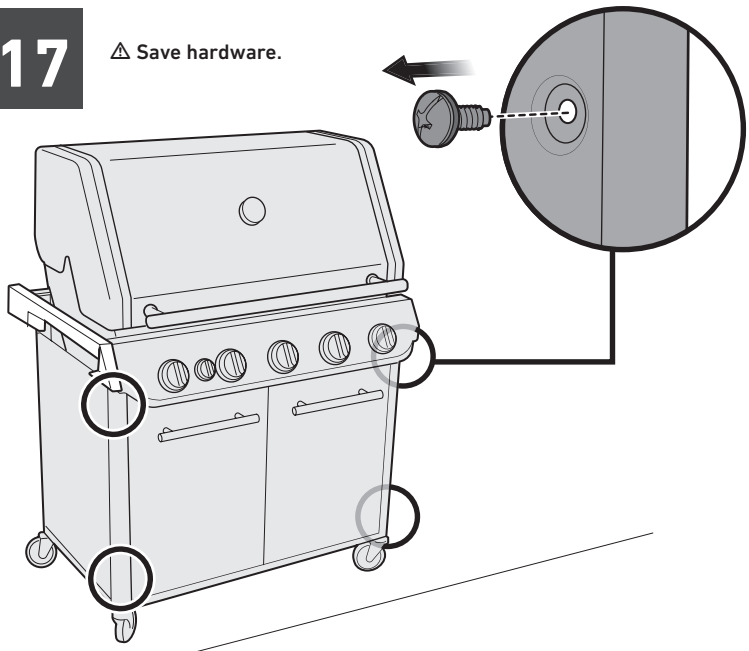

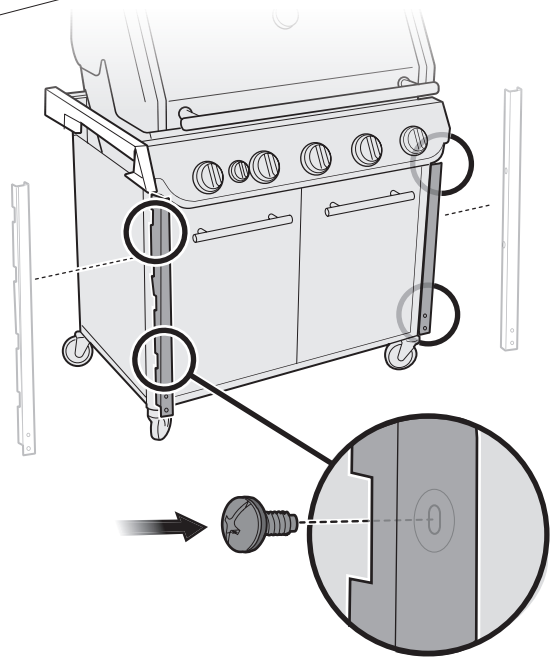

18

Prepare Barbecue for Installation:

Now that the barbecue cabinet and trim pieces have been assembled, check that all parts assembled up to this point are in place and fasteners are fully tightened. Place the barbecue directly in front of the cut-out opening of the built-in structure to prepare for installation.

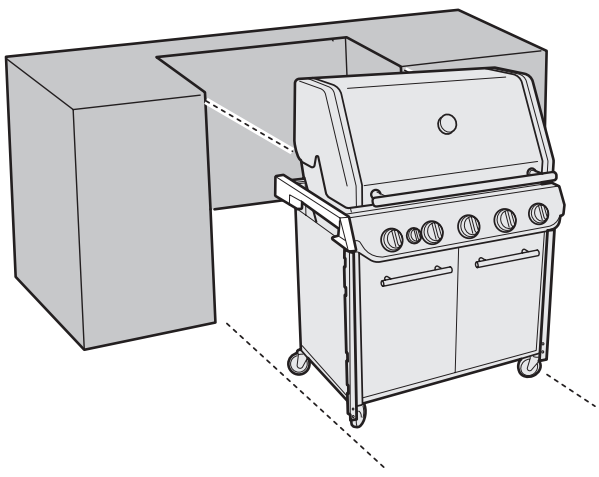

19

Push barbecue into cutout opening and lock the front casters. Rotate the front casters to tuck them beneath the cabinet.

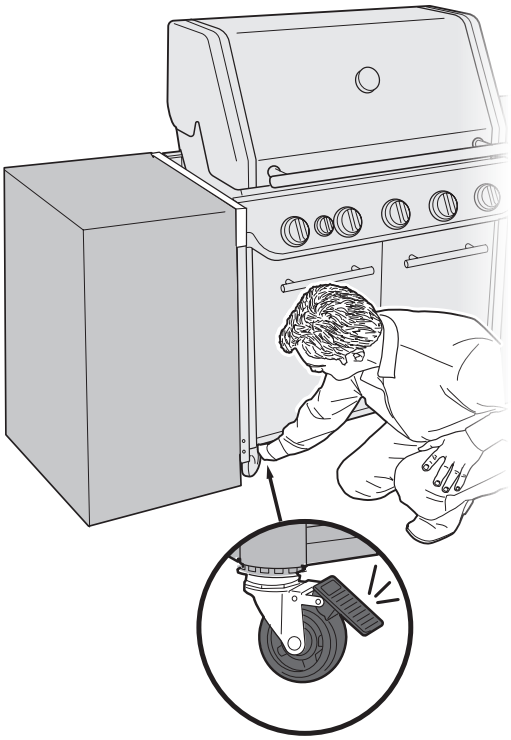

20

-4

C

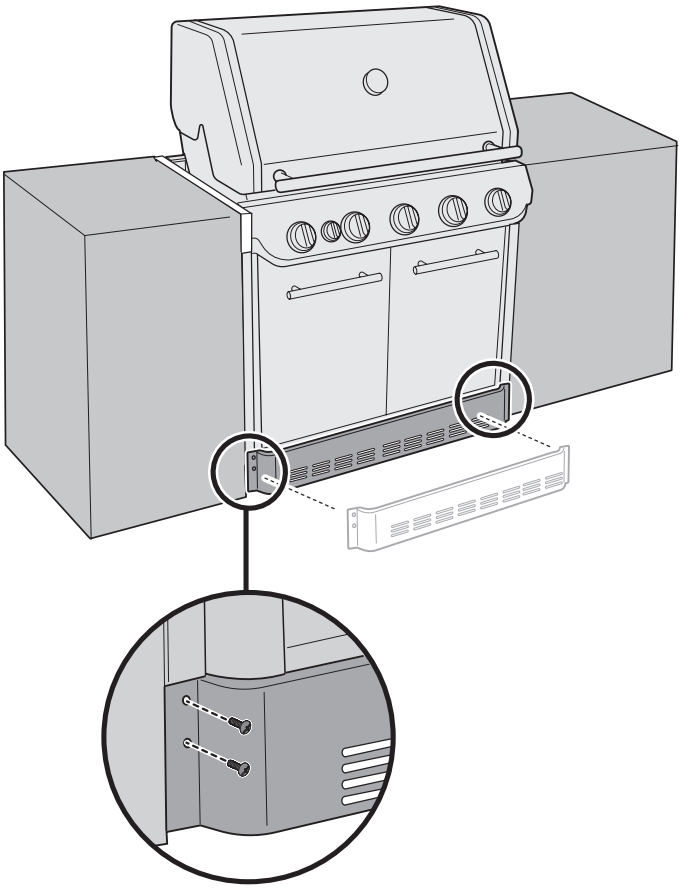

21

Connect Gas Supply

A 58 inch (147 cm) main corrugated gas line is connected to the manifold of the grill.

A) Pass the main corrugated gas line through the "island" structure cavity to the bulkhead inside the gas supply enclosure **(1)**.

B) Connect the main corrugated gas line to the ½ inch (12.7 mm) flare fitting on the bulkhead **(2)**.

NOTE: ⅜ inch (9.5 mm) flared gaskets are included with your Built-In Gas Barbecue for future installation of any ⅜ inch (9.5 mm) gas accessory connection. For this installation, the ⅜ inch (9.5 mm) flared gasket is not needed.

⅜" (9.5 mm) Flared Gasket
DO NOT USE. These are not needed for this installation.

CONNECTION CHART

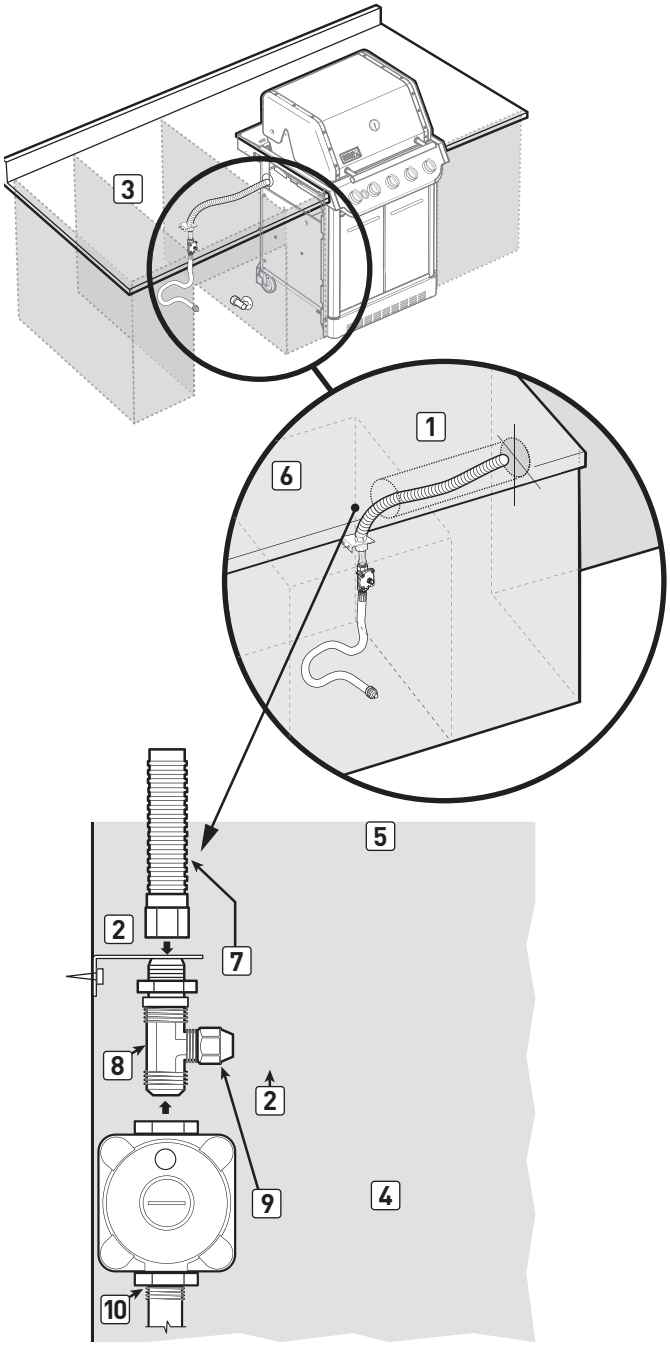

3	Typical gas supply cabinet or gas supply enclosure location
4	Side view
5	Top of box
6	Back of box
7	Corrugated gas line to manifold
8	Bulkhead
9	⅜" (9.5 mm) cap - DO NOT REMOVE
10	Connect hose and regulator to bulkhead

22 The included filler strips may be used to fill any gaps at the countertop or front of the barbecue. Install as needed.

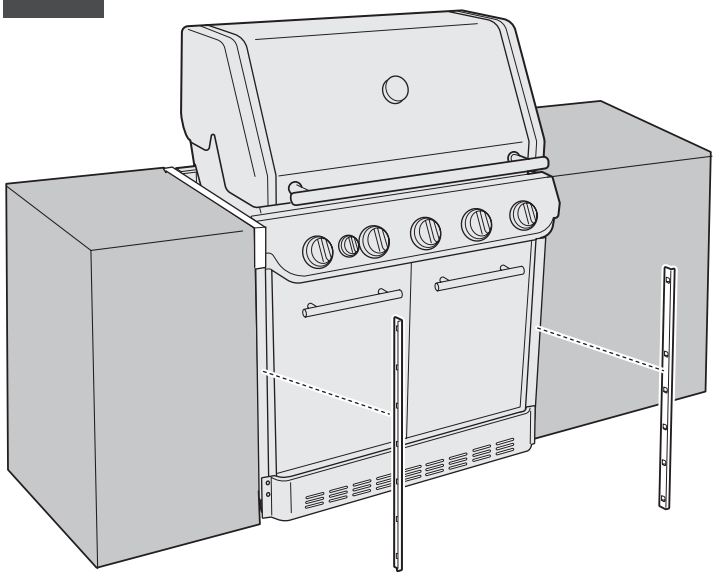

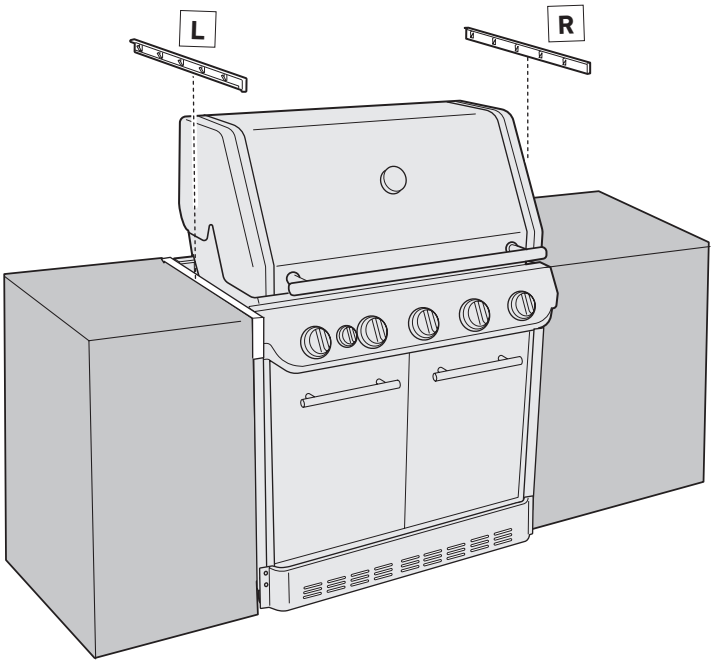

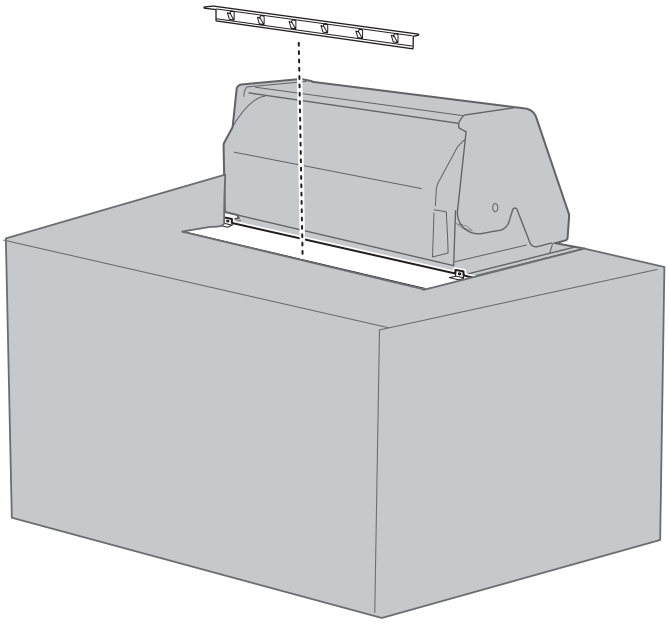

23

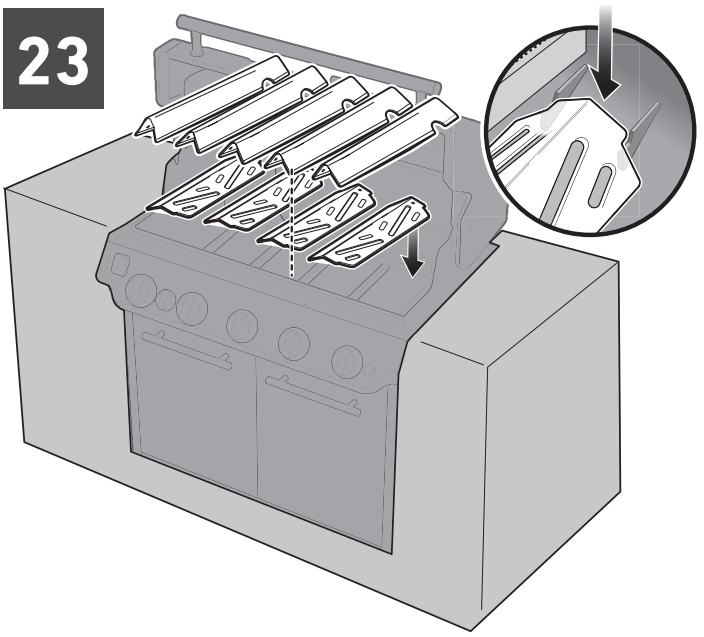

24 ***Refer to your Weber Crafted Outdoor Kitchen Collection accessory instructions.***

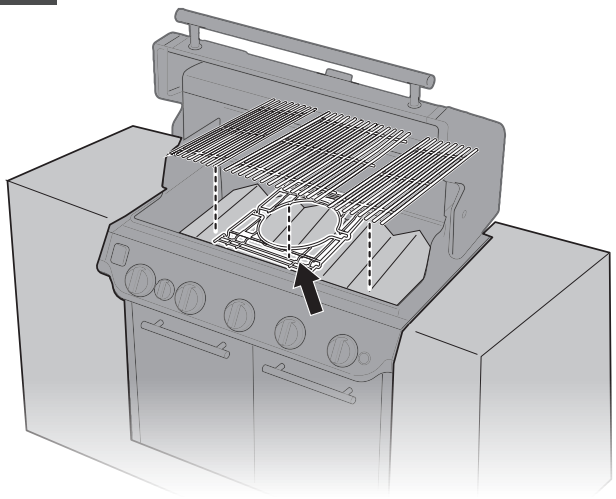

25 ***Refer to Owner's Manual for features and usage.***

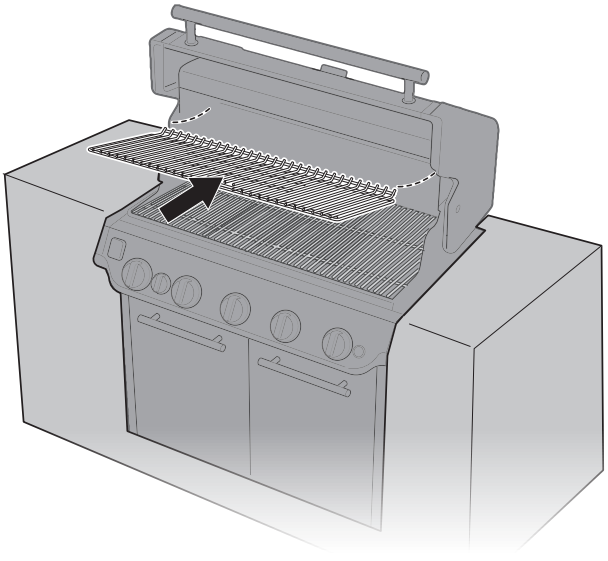

26

Refer to Owner's Manual for features and usage.

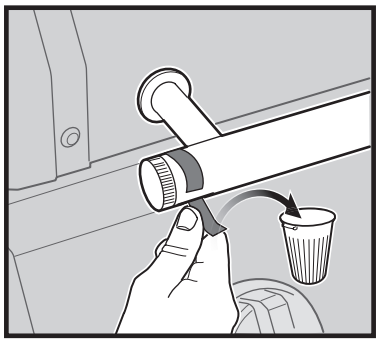

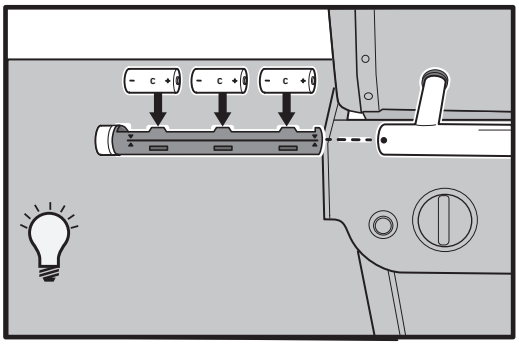

27

Refer to Owner's Manual for features and usage.

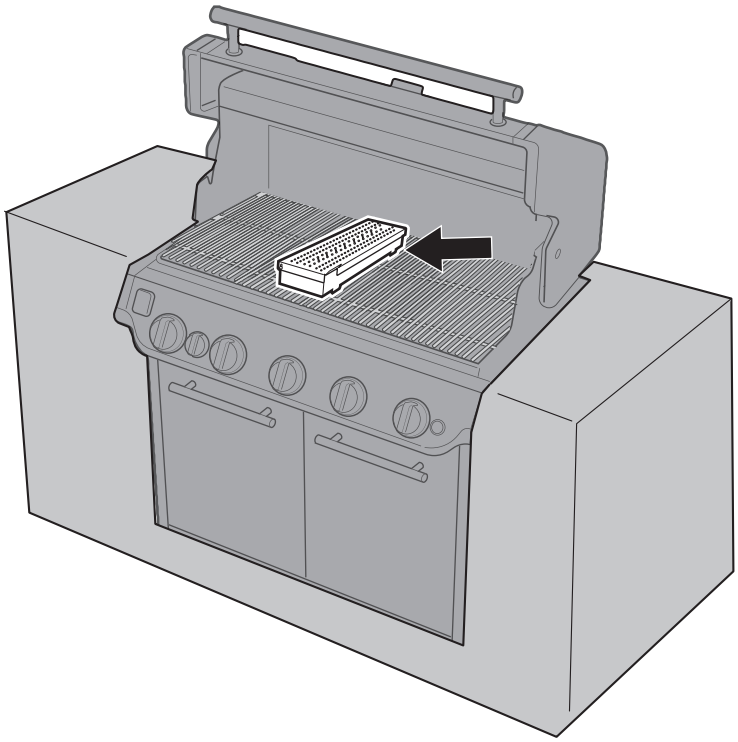

28

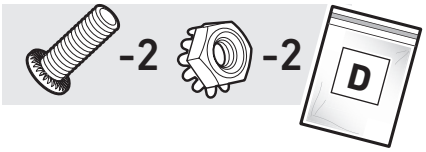

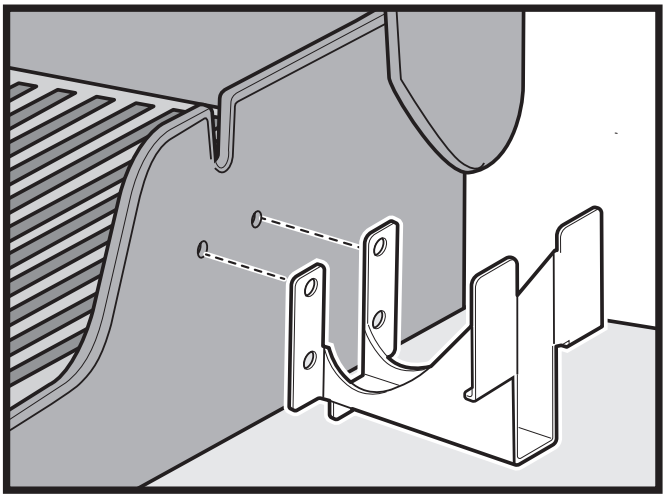

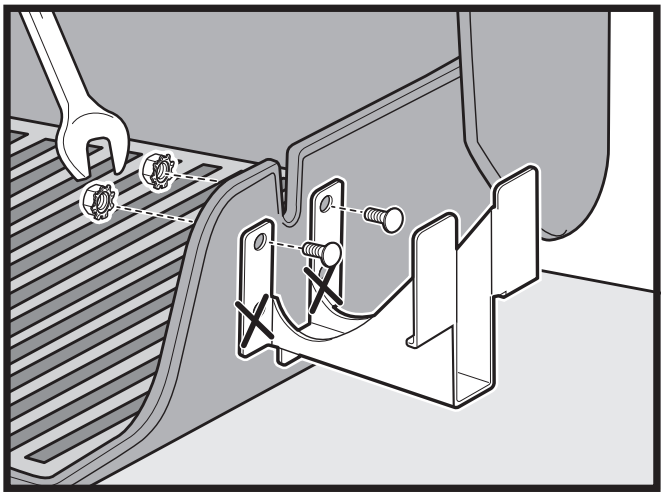

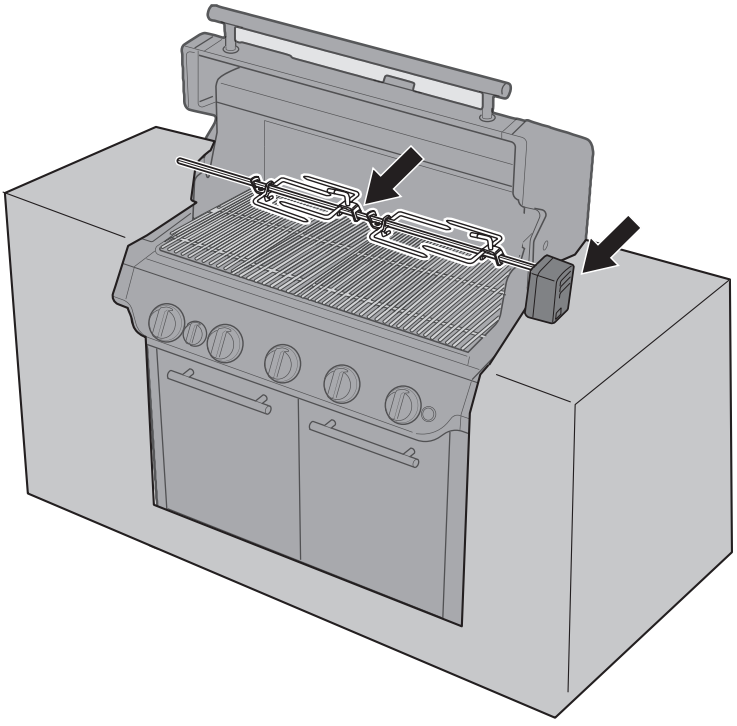

Refer to Owner's Manual for operating the rotisserie



WEBER-STEPHEN PRODUCTS LLC
www.weber.com

© 2024 Designed and engineered by Weber-Stephen Products LLC,
1415 S. Roselle Road, Palatine, Illinois 60067 USA.