GENESIS

E-335 • S-335 • SE-S-335 • SP-E-335
E-435 • S-435 • SL-S-435

NG Owner's Manual



REGISTER TODAY

Register your gas grill and receive special content to make you the ultimate backyard hero.

Scan the QR Code or register online at weber.registria.com

Need help? Visit photoregister.com/help or text help to 71403

52985

Keep this Owner's Manual for future reference, thoroughly read through it, and if you have any questions please contact us today.

080623
enUS

Important Safety Information

DANGER, WARNING, and CAUTION statements are used throughout this Owner's Manual to emphasize critical and important information. Read and follow these statements to help ensure safety and prevent property damage. The statements are defined below.

⚠ **DANGER:** Indicates a hazardous situation which, if not avoided, ***will result in death or serious injury***.

⚠ **WARNING:** Indicates a hazardous situation which, if not avoided, ***could result in death or serious injury***.

⚠ **CAUTION:** Indicates a hazardous situation which, if not avoided, ***could result in minor or moderate injury***.

⚠ DANGER

If you smell gas:

- **Shut off gas to the appliance (grill).**
- **Extinguish any open flame.**
- **Open lid.**
- **If odor continues, keep away from the appliance (grill) and immediately call your gas supplier or your fire department.**

⚠ WARNING

- **Do not store or use gasoline or other flammable liquids or vapors in the vicinity of this (grill) or any other appliance.**
- **An LP cylinder (tank) not connected for use shall not be stored in the vicinity of this (grill) or any other appliance.**

USE OUTDOORS ONLY.

READ THE INSTRUCTIONS BEFORE USING THE APPLIANCE (GRILL).

NOTICE TO INSTALLER: These instructions must be left with the consumer.

NOTICE TO CONSUMER: Retain these instructions for future reference.

Installation and Assembly

⚠ DANGER: This grill is not intended to be installed in or on recreational vehicles or boats.

⚠ WARNING: Do not use this grill unless all parts are in place and the grill was properly assembled according to the assembly instructions.

⚠ WARNING: Do not build this model of grill in any built-in or slide-in construction.

⚠ WARNING: Do not modify the appliance (grill). Liquid propane gas is not natural gas. The conversion or attempted use of natural gas in a liquid propane gas unit or liquid propane gas in a natural gas unit is unsafe and will void your warranty.

⚠ WARNING: Do not route the ten-foot hose under a deck. The hose must be visible.

- **WE RECOMMEND THAT THE INSTALLATION OF THIS NATURAL GAS GRILL BE PERFORMED BY A PROFESSIONAL.**
- Confirm that the branch supply line from the house to the grill is properly installed before using the grill.
- In the United States, installation must conform with local codes or, in the absence of local codes, with either the National Fuel Gas Code, ANSI Z223.1/NFPA 54, Natural Gas and Propane Installation Code, CSA B149.1; or Propane Storage and Handling Code, B149.2; or the Standard for Recreational Vehicles, ANSI A119.2/NFPA 1192, and CSA Z240 RV Series, Recreational Vehicle Code, as applicable.
- In Canada, the installation of this grill must comply with local codes and/or the latest edition of Standard CAN/CSA-B149.2 (Propane Storage and Handling Code). These instructions, while generally acceptable, do not necessarily comply with the Canadian installation codes, particularly with piping above and below ground.
- In Mexico, if there are local codes that apply to portable gas appliances, you must comply with the latest edition of Official Mexican Standard (NOM).
- If an external electrical source is utilized (such as a rotisserie) it must be electrically grounded in accordance with local codes or, in the absence of local codes, with the National Electrical Code, ANSI/NFPA 70, or the Canadian Electrical Code, Part 1, CSA C22.1.

Operation

⚠ DANGER: Only use the grill outdoors in a well-ventilated area. Do not use in a garage, building, breezeway, tent, any other enclosed area, or beneath overhead combustible construction.

⚠ DANGER: Do not use the grill in any vehicle or in any storage or cargo area of any vehicle. This includes, but is not limited to, cars, trucks, station wagons, mini-vans, sport utility vehicles, recreational vehicles, and boats.

⚠ DANGER: Do not use the grill within 24 inches (61 cm) of combustible materials. This includes the top, bottom, back and sides of the grill.

⚠ DANGER: Keep the cooking area clear of flammable vapors and liquids such as gasoline, alcohol, etc., and combustible materials.

⚠ DANGER: This appliance (grill) must be kept away from flammable materials during use.

⚠ DANGER: Do not put a grill cover or anything flammable on, or in the storage area under the grill while it is in operation or is hot.

⚠ DANGER: Should a grease fire occur, turn off all burners and leave lid closed until fire is out.

⚠ WARNING: Accessible parts may be very hot. Keep young children away.

⚠ WARNING: The use of alcohol, prescription drugs, non-prescription drugs, or illegal drugs may impair the consumer's ability to properly and safely assemble, move, store, or operate the grill.

⚠ WARNING: Never leave the grill unattended during pre-heating or use. Exercise caution when using this grill. The entire cookbox gets hot when in use.

⚠ WARNING: Do not move the appliance (grill) during use.

⚠ WARNING: Keep any electrical supply cord and the fuel supply hose away from any heated surfaces.

⚠ CAUTION: This product has been safety-tested and is only certified for use in a specific country. Refer to country designation located on outside of box.

- Do not use charcoal or lava rock in the grill.
- This natural gas grill is factory built to operate using natural gas only. Never attempt to operate your grill on gases other than the type specified on the grill rating plates.

Storage and/or Nonuse

⚠ WARNING: Turn off the gas at the natural gas supply valve when the grill in not in use.

⚠ WARNING: After a period of storage and/or nonuse, the grill should be checked for gas leaks and burner obstructions before use.

- Storage of the grill indoors is permissible only if the grill is disconnected from the gas supply.

California Proposition 65

⚠ WARNING: Combustion byproducts produced when using this product contain chemicals known to the state of California to cause cancer, birth defects, or other reproductive harm.

⚠ **PROPOSITION 65 WARNING:** Handling the brass material on this product exposes you to lead, a chemical known to the state of California to cause cancer, birth defects, or other reproductive harm. *Wash hands after handling this product.*

HELLO!

We are so glad that you have joined us on the journey to grilling happiness. Please take some time to read through this Owner's Manual to ensure that you are up and grilling quickly and easily. We want to be with you for the life of your grill, so please take just a couple of minutes to register your grill. When you sign up for a WEBER-ID as part of your registration, we will deliver special grill-related content just for you to enjoy.

So, come along and join us online, on your smart device or however else you'd like to stay in touch.

Thank you for choosing WEBER.
We are happy you are here.

TABLE OF CONTENTS

2 Welcome to Weber
- Important Safety Information

4 The Weber Promise

5 Product Features
- GENESIS Features
- Hign Performance Grilling

6 Getting Started
- Important Information about Natural Gas & Gas Connections
- Hose Connection & Leak Checking

10 Operation
- The Very First Time You Grill
- Every Time You Grill
- Igniting the Grill
- Using the sear zone
- Igniting the Side Burner

14 Tips and Hints
- The Flame - Direct or Indirect
- Discover What Your Grates Can Do
- Grilling Do's and Don'ts
- Real Smoke Flavor
- Extra on the Side
- More Cooking Space
- Grilling at Night

18 Product Care
- Cleaning and Maintenance

20 Troubleshooting

24 Grilling Guide

25 Replacement Parts

The WEBER Promise

At WEBER, we pride ourselves on two things: making grills that last and providing a lifetime of excellent customer service.

Limited Warranty

Thank you for purchasing a WEBER product. Weber-Stephen Products LLC, 1415 S. Roselle Road, Palatine, Illinois 60067 ("WEBER") prides itself on delivering a safe, durable, and reliable product.
This is WEBER's Limited Warranty ("Warranty") provided to you at no extra charge. It contains the information you will need to have your WEBER product repaired in the unlikely event of a failure or defect.
Pursuant to applicable laws, the customer has several rights in case the product is defective. Those rights include supplementary performance or replacement, abatement of the purchasing price, and compensation. These and other statutory rights remain unaffected by this warranty provision. In fact, this warranty grants additional rights to the Owner that are independent from statutory warranty provisions.

WEBER'S LIMITED WARRANTY

WEBER warrants, to the purchaser of the WEBER product (or in the case of a gift or promotional situation, the person for whom it was purchased as a gift or promotional item) ("Owner"), that the WEBER product is free from defects in material and workmanship for the period(s) of time specified below when assembled and operated in accordance with the accompanying Owner's Manual, normal wear and tear excluded . (Note: If you lose or misplace your WEBER Owner's Manual, a replacement is available online at www.weber.com.) WEBER agrees within the framework of this warranty to repair or replace the part that is defective in material or workmanship subject to the limitations, and exclusions listed below. TO THE EXTENT ALLOWABLE BY APPLICABLE LAW, THIS WARRANTY IS EXTENDED ONLY TO THE ORIGINAL PURCHASER AND IS NOT TRANSFERABLE TO SUBSEQUENT OWNERS, EXCEPT IN THE CASE OF GIFTS AND PROMOTIONAL ITEMS AS NOTED ABOVE.
WEBER stands by its products and is happy to provide you with the Warranty described for material defects in the grill or its relevant components, normal wear and tear excepted.
- 'Normal wear and tear' includes cosmetic and other immaterial deterioration that may come with ownership of your grill over time, such as surface rust, dents / scratches, etc.

However, WEBER will honor this Warranty for the grill or its relevant components where damage or dysfunction results from a material defect.
- 'Material defect' includes rust through or burn through of certain parts, or other damage or failure inhibiting your ability to safely / properly use your grill.

OWNER'S RESPONSIBILITIES UNDER THIS WARRANTY

To ensure trouble-free warranty coverage, it is important (but it is not required) that you register your WEBER product online at www.weber.com. Please also retain your original sales receipt and/or invoice. Registering your WEBER product confirms your warranty coverage and provides a direct link between you and WEBER in case we need to contact you. If you have not had time to register your grill before calling for Warranty service, please have the following information available when you do call:
Name – Address – Phone Number – Email – Serial Number – Purchase Date – Purchase Dealer – Model – Color – Primary Issue
The above warranty only applies if the Owner takes reasonable care of the WEBER product by following all assembly instructions, usage instructions, and preventative maintenance as outlined in the accompanying Owner's Manual, unless the Owner can prove that the defect or failure is independent of non-compliance with the above mentioned obligations. If you live in a coastal area, or have your product located near a pool, maintenance includes regular washing and rinsing of the exterior surfaces as outlined in the accompanying Owner's Manual.

WARRANTY HANDLING / EXCLUSION OF WARRANTY

If you believe that you have a part which is covered by this Warranty, please contact WEBER Customer Service using the contact information on our website (www.weber.com, or such country-specific website to which Owner may be redirected). WEBER will, upon investigation, repair or replace (at its option) a defective part that is covered by this Warranty. In the event that repair or replacement are not possible, WEBER may choose (at its option) to replace the grill in question with a new grill of equal or greater value. WEBER may ask you to return parts for inspection, shipping charges to be pre-paid by owner.
When you contact Customer Service, please have the following information available:
Name – Address – Phone Number – Email – Serial Number – Purchase Date – Purchase Dealer – Model – Color – Primary Issue

This WARRANTY lapses if there are damages, deteriorations, discolorations, and/or rust for which WEBER is not responsible caused by:

- Abuse, misuse, alteration, modification, misapplication, vandalism, neglect, improper assembly or installation, and failure to properly perform normal and routine maintenance;
- Insects (such as spiders) and rodents (such as squirrels), including but not limited to damage to burner tubes and/or gas hoses;
- Exposure to salt air and/or chlorine sources such as swimming pools and hot tubs/spas;
- Severe weather conditions such as hail, hurricanes, earthquakes, tsunamis or surges, tornadoes or severe storms.
- Acid rain and other environmental factors.

Using third party parts will not void this Warranty. However, any parts that are used and/or installed on your WEBER product that are not genuine WEBER parts are not covered by this Warranty. In addition, any damages that result from the use and/or installation of parts on your WEBER product that are not genuine WEBER parts are not covered by this Warranty. Any conversion of a gas grill not authorized by WEBER and performed by a WEBER authorized service technician will void this Warranty.

PRODUCT WARRANTY PERIODS

Cookbox:
12 years, no rust through/burn through
(2 years paint excluding fading or discoloration)

Lid assembly:
12 years, no rust through/burn through
(2 years paint excluding fading or discoloration)

Stainless steel burner tubes:
10 years, no rust through/burn through

Stainless steel cooking grates:
10 years, no rust through/burn through

Stainless steel FLAVORIZER BARS:
10 years, no rust through/burn through

Porcelain-enameled cast iron cooking grates:
10 years, no rust through/burn through

WEBER CONNECT Components:
3 years

All remaining parts:
5 years

DISCLAIMERS

APART FROM THE WARRANTY AND DISCLAIMERS AS DESCRIBED IN THIS WARRANTY STATEMENT, THERE ARE EXPLICITLY NO FURTHER WARRANTY OR VOLUNTARY DECLARATIONS OF LIABILITY GIVEN HERE WHICH GO BEYOND THE STATUTORY LIABILITY APPLYING TO WEBER. THE PRESENT WARRANTY STATEMENT ALSO DOES NOT LIMIT OR EXCLUDE SITUATIONS OR CLAIMS WHERE WEBER HAS MANDATORY LIABILITY AS PRESCRIBED BY STATUTE. NO WARRANTIES SHALL APPLY AFTER THE APPLICABLE PERIODS OF THIS WARRANTY. NO OTHER WARRANTIES GIVEN BY ANY PERSON, INCLUDING A DEALER OR RETAILER, WITH RESPECT TO ANY PRODUCT (SUCH AS ANY "EXTENDED WARRANTIES"), SHALL BIND WEBER. THE EXCLUSIVE REMEDY OF THIS WARRANTY IS REPAIR OR REPLACEMENT OF THE PART OR PRODUCT.
IN NO EVENT UNDER THIS WARRANTY SHALL RECOVERY OF ANY KIND BE GREATER THAN THE AMOUNT OF THE PURCHASE PRICE OF THE WEBER PRODUCT SOLD.
YOU ASSUME THE RISK AND LIABILITY FOR LOSS, DAMAGE, OR INJURY TO YOU AND YOUR PROPERTY AND/OR TO OTHERS AND THEIR PROPERTY ARISING OUT OF THE MISUSE OR ABUSE OF THE PRODUCT OR FAILURE TO FOLLOW INSTRUCTIONS PROVIDED BY WEBER IN THE ACCOMPANYING OWNER'S MANUAL.
PARTS AND ACCESSORIES REPLACED UNDER THIS WARRANTY ARE WARRANTED ONLY FOR THE BALANCE OF THE ABOVE MENTIONED ORIGINAL WARRANTY PERIOD(S). THIS WARRANTY APPLIES TO PRIVATE SINGLE FAMILY HOME OR APARTMENT USE ONLY AND DOES NOT APPLY TO WEBER GRILLS USED IN COMMERCIAL, COMMUNAL OR MULTI-UNIT SETTINGS SUCH AS RESTAURANTS, HOTELS, RESORTS, OR RENTAL PROPERTIES.
WEBER MAY FROM TIME TO TIME CHANGE THE DESIGN OF ITS PRODUCTS. NOTHING CONTAINED IN THIS WARRANTY SHALL BE CONSTRUED AS OBLIGATING WEBER TO INCORPORATE SUCH DESIGN CHANGES INTO PREVIOUSLY MANUFACTURED PRODUCTS, NOR SHALL SUCH CHANGES BE CONSTRUED AS AN ADMISSION THAT PREVIOUS DESIGNS WERE DEFECTIVE.

Weber-Stephen Products LLC
Customer Service Center
1415 S. Roselle Road
Palatine, IL 60067
U.S.A.

For replacement parts, call:
1-800-446-1071



PROTECT YOUR INVESTMENT

Shield your grill from the elements with a heavy-duty premium grill cover.

GENESIS FEATURES

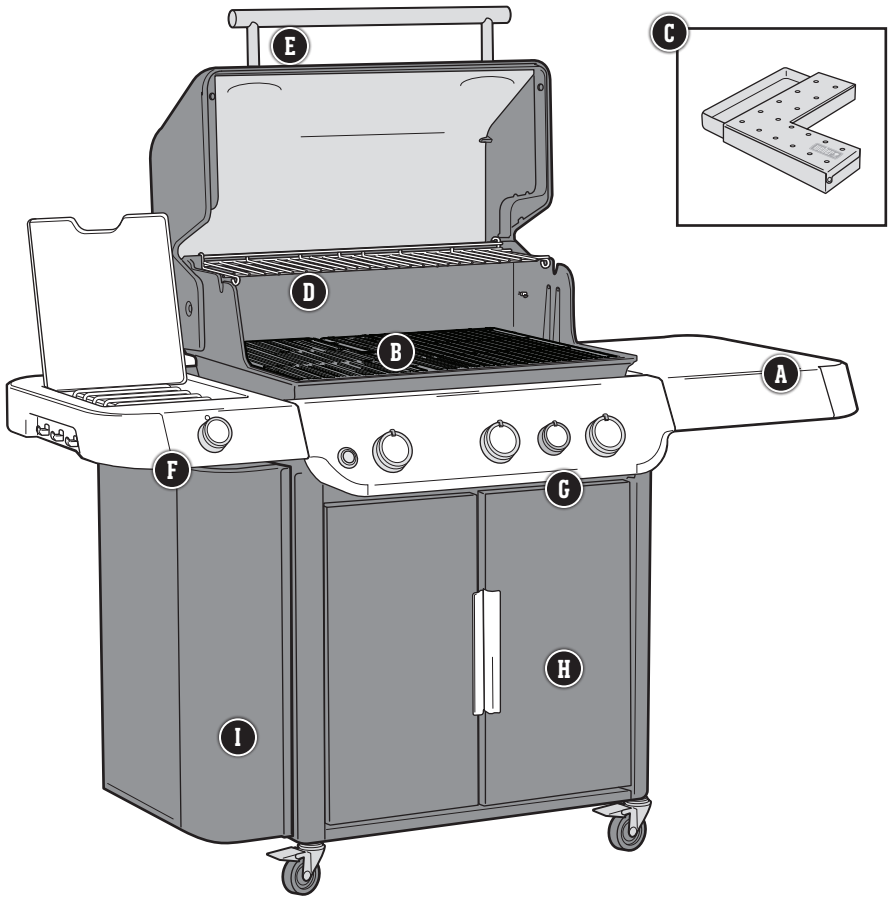

A Prep & Serve Table

Use the side tables to keep platters, seasonings, and tools within arm's reach. Hang your essential grilling tools on the hooks for easy access and organization of your backyard workspace.

B WEBER CRAFTED Outdoor Kitchen Collection Cooking Grates and Frame

Your grill is Outdoor Kitchen Collection Ready with the included cooking grates and frame. Additional Outdoor Kitchen Collection accessories sold seperately. (Premium stainless steel cooking grates available on SE models only)

C Genesis Smoker Box

Positioned beneath the cooking grates, the smoker box adds continuous smoke to your cook. (SE models only)

D Expandable Top Cooking Grate

Keeps food warm, or toasts buns, while the main course finishes grilling on the grate. Fold it out when you need a secondary cooking surface.

E Grill Lighting

Integrated with the lid handle, LED lights illuminate the cooking surface to keep grilling as the sun goes down. (SE and Premium models only)

F Side Burner

Use the side burner to simmer BBQ sauce or sauté veggies while the main course grills under the lid.

G Sear zone

The sear zone is designed to create an intense heat zone to quickly add sear marks to your meat.

H Grill Cabinet

The grill cabinet adds enclosed storage space for all of your essential grilling tools and accessories.

I Weber Crafted Grill Locker

Convenient side storage makes it easy to access and remove cooking accessories.

HIGH PERFORMANCE GRILLING

The high performance grilling system sets the standard in the world of gas grilling, and lands Weber in a class of its own. This powerful grilling system is based on over 65 years of grilling experience, culinary expertise, and most importantly, the wants and needs of the people who matter most – our grilling community. Each component was uniquely designed for ease-of-use and to provide an unequaled satisfaction to your backyard grilling experience.

1 INFINITY Ignition

The Infinity Ignition is guaranteed to ignite. Rest assured that you'll be up-and-grilling the first time, every time.

2 Burners

The unique, tapered shape delivers a consistent gas flow from front to back. This provides ultimate heat distribution, ensuring that food grills evenly and consistently anywhere on the cooking grates.

3 FLAVORIZER BARS

Stainless Steel FLAVORIZER BARS are angled just right to catch drippings that smoke and sizzle, adding that irresistible smoky flavor that we all know and love to your food.

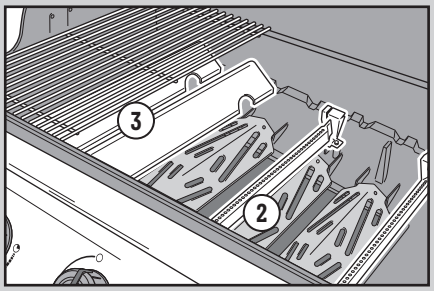

4 Grease Management System

Drippings that are not vaporized by the FLAVORIZER BARS are funneled away from the burners into the disposable drip tray, located within the removable catch pan under the cookbox. Simply remove the catch pan and replace the drip tray as needed.

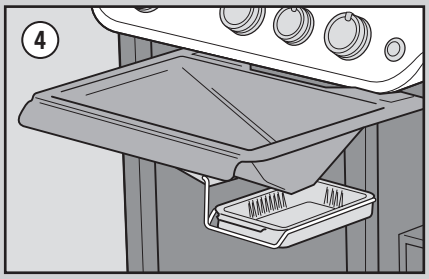

The grills illustrated in this Owner's Manual may vary slightly from the model purchased.

Some features listed are only available on select models.

Important Information about Natural Gas & Gas Connections

What is Natural Gas?

Natural gas (NG) is a combustible, gaseous mixture of simple hydrocarbon compounds, usually found in deep underground reservoirs formed by porous rock. It is a fossil fuel composed almost entirely of methane. Natural gas is delivered by your local utility through an underground pipeline system.

General Specifications

- Three burner grills are designed to operate at 7" of water column pressure (0.2526 psi).
- Four burner grills are designed to operate at 4.5" of water column pressure (0.16245 psi).
- The quick-disconnect fitting can be installed horizontally or pointing downward, but never pointing upward. Installing it with the open end pointing upward can result in water and debris collecting in the quick-disconnect fitting.
- The dust covers (plastic plugs supplied with your grill) help keep the open ends of the quick-disconnect fitting clean while disconnected.

Hose Requirements

- The grill is equipped with a model specific hose that was attached during the manufacturing process. This specific hose must be used for proper performance.
- If the hose becomes worn or damaged, contact the Customer Service Representative in your area using the contact information on our website.

Pressure Testing the Gas Supply

- Disconnect the gas grill when the gas supply is being tested at high pressures. This appliance and its individual shutoff valve must be disconnected from the gas supply piping system during any pressure testing of that system at test pressures in excess of 1/2 psig (3.5 kPa).
- Turn off the gas grill when the gas supply is being tested at low pressures. This appliance must be isolated from the gas supply piping system by closing its individual manual shutoff valve during any pressure testing of the gas supply piping system at test pressures equal to or less than 1/2 psig (3.5 kPa).

Typical NG Grill Pipe Installation

325S • 330 • 335 Models

INSIDE HOUSE

- A Gas supply
- B Shutoff

OUTSIDE HOUSE

- C 3/8" Quick-disconnect
- D 3/8" pipe nipple
- E Reducing coupling
- F 1/2" pipe nipple
- G Locking shutoff

Local codes may require different installations.

Flare fittings should never be used.

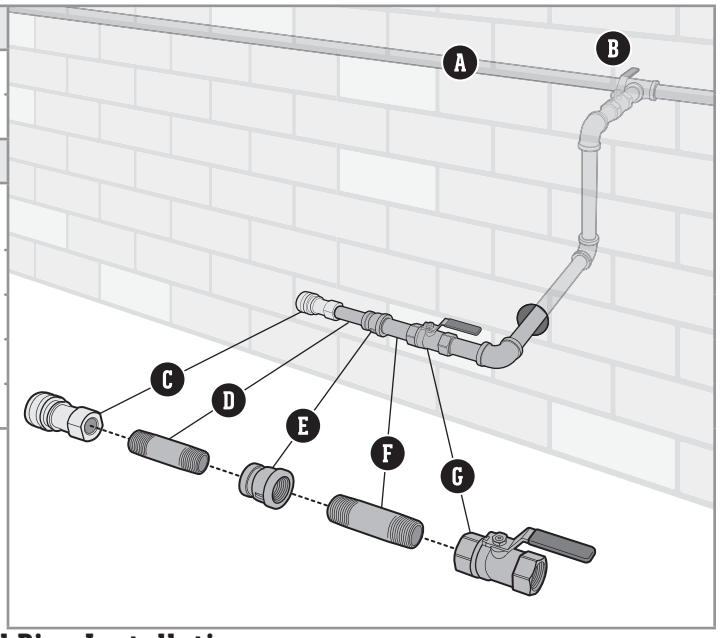

Typical NG Grill Pipe Installation

435 Models

INSIDE HOUSE

- A Gas supply
- B Shutoff

OUTSIDE HOUSE

- C 1/2" Quick-disconnect
- F 1/2" pipe nipple
- G Locking shutoff

Local codes may require different installations.

Flare fittings should never be used.

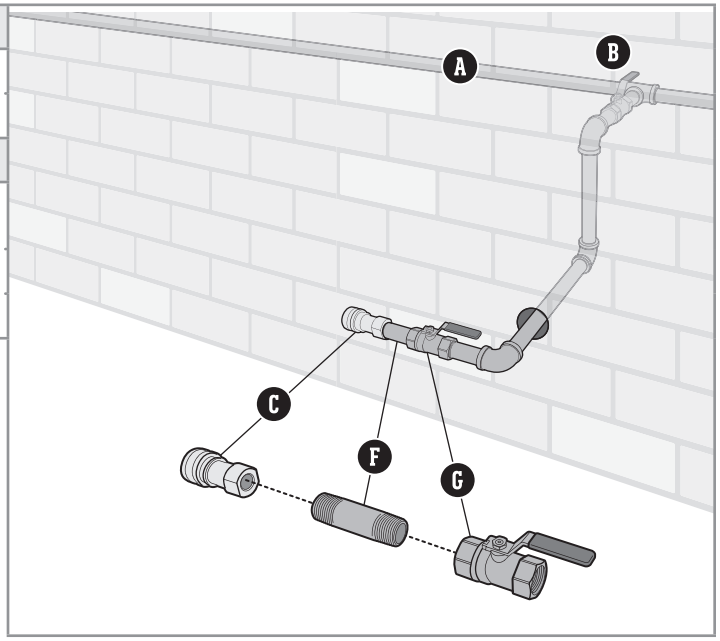

Hose Connection & Leak Checking

Connect the Hose to the Gas Supply

A quick-disconnect fitting connects your grill to the gas supply. Gas will not flow unless the quick-disconnect is properly engaged.

1) Check that all burner control knobs are in the off ○ position. Check by pushing in and turning knobs clockwise **(A)**.
2) Slide the collar of the quick-disconnect back **(B)**.
3) Push male fitting of the hose into the quick-disconnect and maintain pressure. Slide the collar closed **(C)**. If it does not engage or lock, repeat procedure. Proceed to "CHECKING FOR GAS LEAKS".

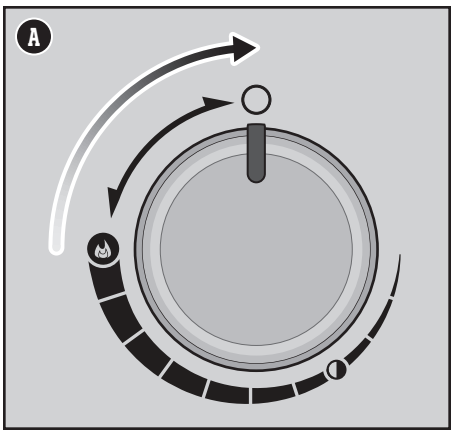

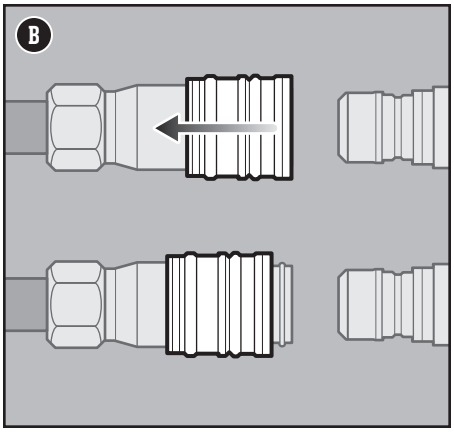

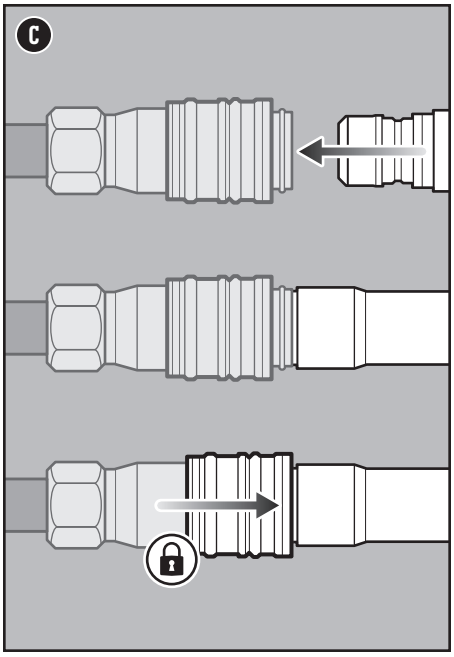

What is a Leak Check?

Once the hose is properly connected, it is necessary to perform a leak check. A leak check is a reliable way to verify that gas is not escaping after you connect the hose to the gas supply. The fuel system in your grill features factory-made connections that have been thoroughly checked for gas leaks and the burners have been flame-tested.
WEBER recommends performing a thorough leak check after assembly, as well as annually. The following fittings should be tested:

- Where the gas hose connects to the gas supply.
- Where the gas hose connects to the bulkhead.
- Where the bulkhead connects to the corrugated gas line.

Checking for Gas Leaks

1) Wet fittings **(D)** with a soap and water solution, using a spray bottle, brush or rag. You can make your own soap and water solution by mixing 20% liquid soap with 80% water; or, you can purchase leak check solution in the plumbing section of any hardware store.
2) Turn the gas supply valve on.
3) If bubbles appear there is a leak:
   a) If the leak is at the gas supply **(E)**. Turn off the gas. DO NOT OPERATE THE GRILL.

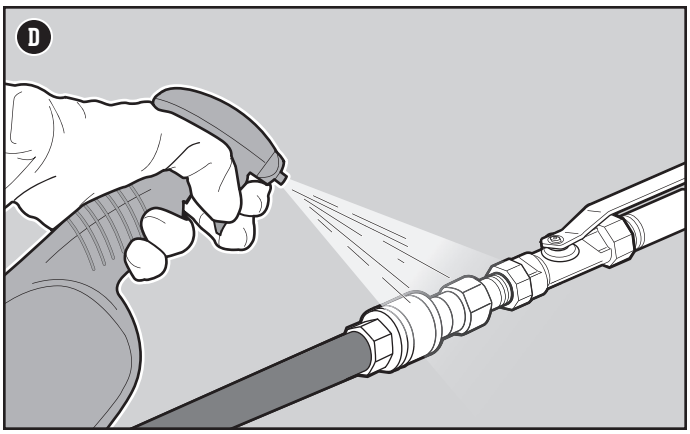

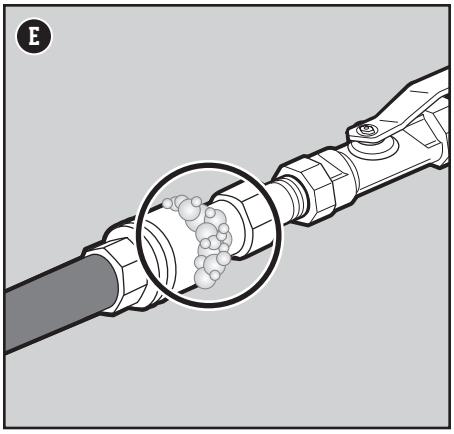

⚠ DANGER: Do not use a flame to check for gas leaks. Be sure there are no sparks or open flames in the area while you check for leaks.

⚠ DANGER: Leaking gas may cause a fire or explosion.

⚠ DANGER: Do not operate the grill if there is a gas leak present.

b) If the leak is at any fittings indicated in illustration **(F)**, re-tighten fitting with a wrench and recheck for leaks with soap and water solution. If leak persists, turn off the gas. DO NOT OPERATE THE GRILL.

c) If the leak is at any fittings indicated in illustration **(G)**, turn off the gas. DO NOT OPERATE THE GRILL.

If a leak is present, contact the Customer Service Representative in your area using the contact information on our website.

4) If bubbles do not appear, leak checking is complete. Turn gas supply valve off and rinse connections with water.

NOTE: Since some leak test solutions, including soap and water, may be slightly corrosive, all connections should be rinsed with water after checking for leaks.

Disconnect the Hose from the Gas Supply

1) Slide the collar back and pull out the plug. This automatically shuts off the gas.

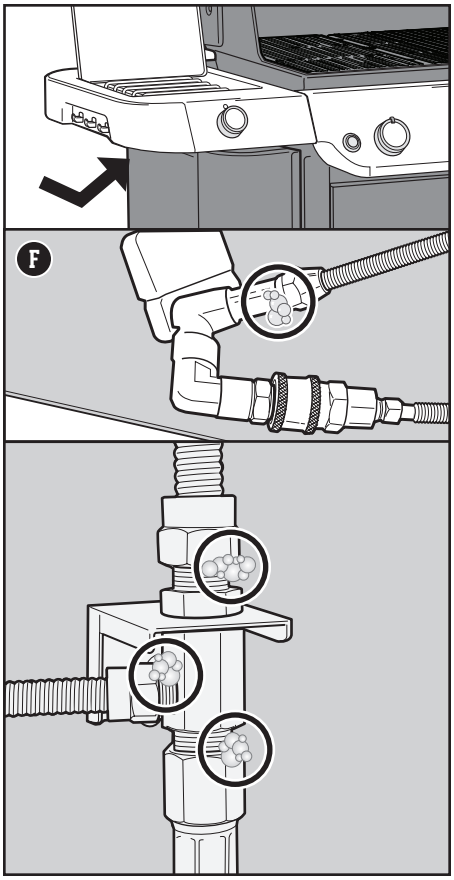

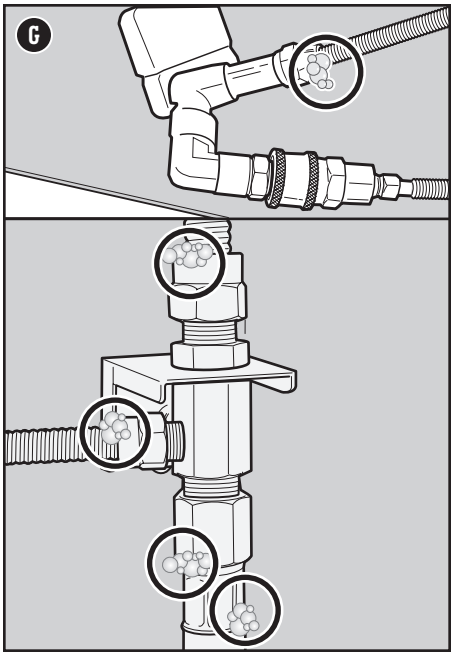

The Very First Time You Grill

Perform an Initial Burn-Off

Heat the grill on the highest setting, with the lid closed, for at least 20 minutes prior to grilling for the first time.

Every Time You Grill

Meal-to-Meal Maintenance

The Meal-To-Meal Maintenance plan includes the following simple, yet important, steps that should always be performed prior to grilling.

Check for Grease

Your grill was built with a grease management system that funnels grease away from food and into a disposable container. As you cook, grease is channeled down the slide-out grease tray and into a disposable drip tray that lines the catch pan. This system should be cleaned each and every time you grill to prevent fires.

1. Confirm that the grill is off and cool.
2. Open the doors.
3. Access the slide-out grease tray by pulling the tray towards you until it stops **(A)**. Remove excess grease with a plastic scraper. Scrape the grease down through the openning in the grease tray, into the catch pan below.
4. Remove the catch pan **(B)**. Check for excessive amounts of grease in the disposable drip pan that lines the catch pan. Discard disposable drip pan when necessary and replace with a new one.
5. Reinstall all components.

Inspect the Hose

Routine inspection of the hose is necessary.

1. Confirm that the grill is off and cool.
2. Check hose for any signs of cracking, abrasions, or cuts **(C)**. If the hose is found to be damaged in any way, do not use the grill.

Preheat the Grill

Preheating the grill is critical to successful grilling. Preheating helps to prevent food from sticking to the grate and gets the grate hot enough to sear properly. It also burns off residue of a previously cooked meal.

1. Open the grill lid.
2. Ignite your grill according to the ignition instructions in this Owner's Manual.
3. Close lid.
4. Preheat the grill with all burners on the start/high position for 15 minutes **(D)**.

Clean the Cooking Grate

After preheating, any bits of food or debris left over from previous use will be easier to remove. Cleaned grates will also prevent your next meal from sticking.

1. Brush the grates with a stainless steel bristle grill brush immediately after preheating **(E)**.

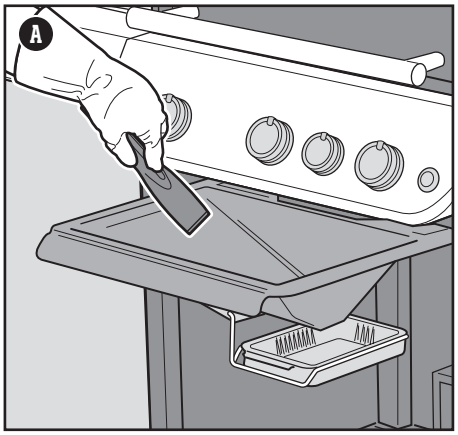

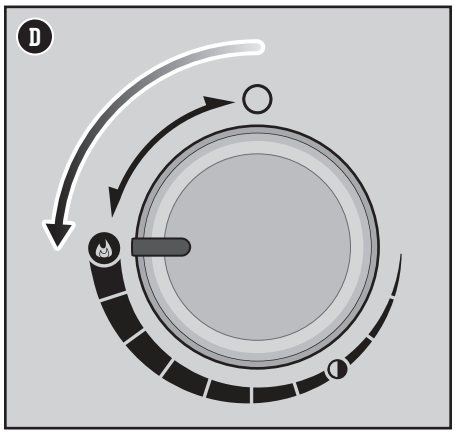

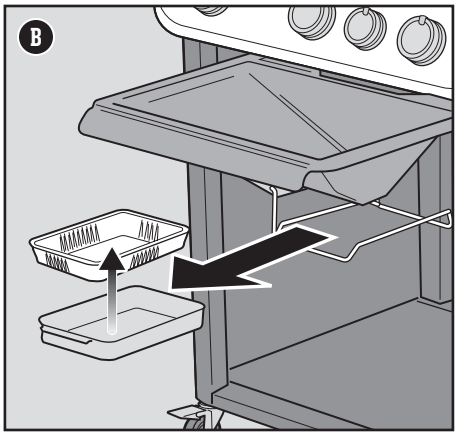

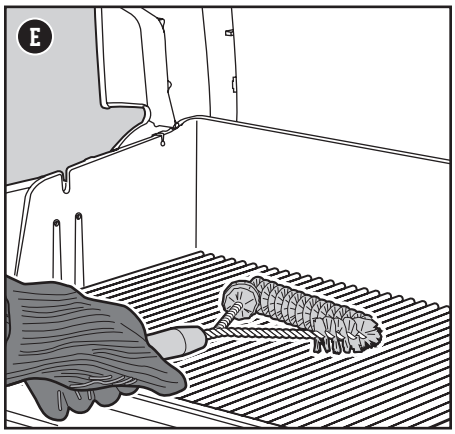

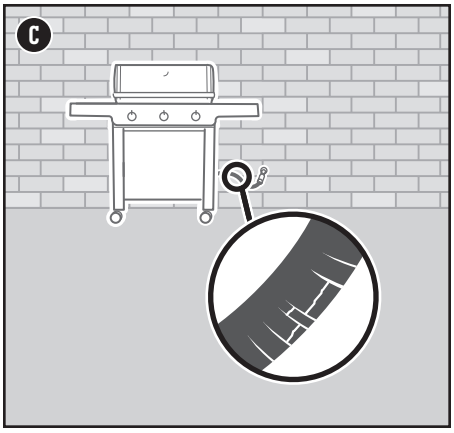

⚠ DANGER: Do not line the slide-out grease tray or cookbox with aluminum foil.

⚠ DANGER: Check the slide-out grease tray and catch pan for grease build-up before each use. Remove excess grease to avoid a grease fire.

⚠ WARNING: Use caution when removing catch pan and disposing of hot grease.

⚠ WARNING: Use heat-resistant barbecue mitts or gloves when operating grill.

⚠ WARNING: Grill brushes should be checked for loose bristles and excessive wear on a regular basis. Replace brush if any loose bristles are found on cooking grates or brush. WEBER recommends purchasing a new stainless steel bristle grill brush at the beginning of every spring.

⚠ WARNING: If the hose is found to be damaged in any way, do not use the grill. Replace using only WEBER authorized replacement hose.

⚠ WARNING: Keep ventilation openings around tank clear and free of debris.

Igniting the Grill

Using the Electronic Ignition System to Ignite the Grill

Each control knob operates an individual burner, and each burner ignites independently. Ignite the burners starting from left to right. All burners should be lit for preheating, however, all burners do not have to be lit while grilling.

1) Open the grill lid **(A)**.
2) Check that all burner control knobs are in the off ○ position. Check by pushing in and turning knobs clockwise **(B)**.
3) Turn the gas supply valve on **(C)**.
4) Begin with the burner furthest to the left. Push the burner control knob in and turn it counterclockwise to the start/high position **(D)**.
5) Push and hold the electronic ignition button **(E)**. You will hear it ticking.
6) Check that the burner is lit by looking through the cooking grates and through the half-circle cutout in the FLAVORIZER BARS.
7) If the burner does not ignite, turn burner control knob to the off ○ position and wait five minutes to allow the gas to clear before attempting to light the burner again.
8) If the burner ignites, repeat steps 4 through 6 to light the remaining burners.

Should the burners fail to ignite using the electronic ignition, refer to the TROUBLESHOOTING section. There you will find instructions on igniting the grill with a match to help determine the exact problem.

To Extinguish Burners

1) Push each burner control knob in and then turn clockwise all the way to the off ○ position.
2) Turn gas supply valve off.

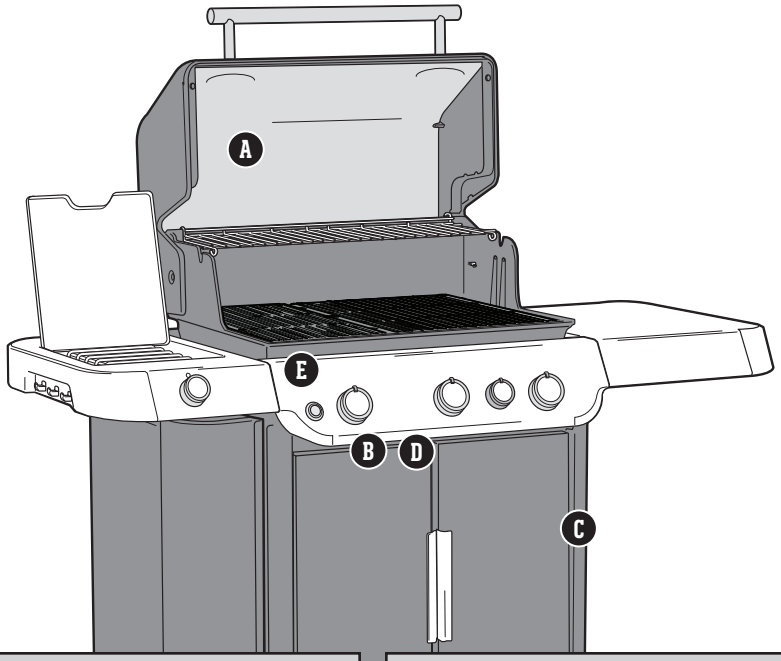

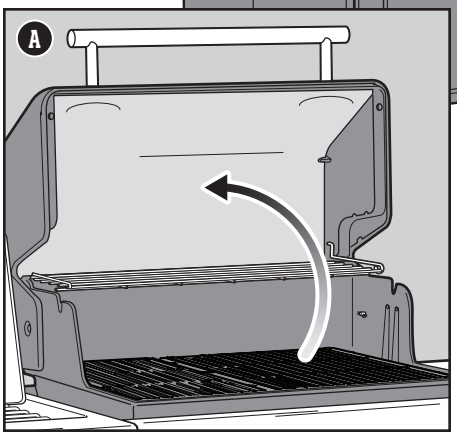

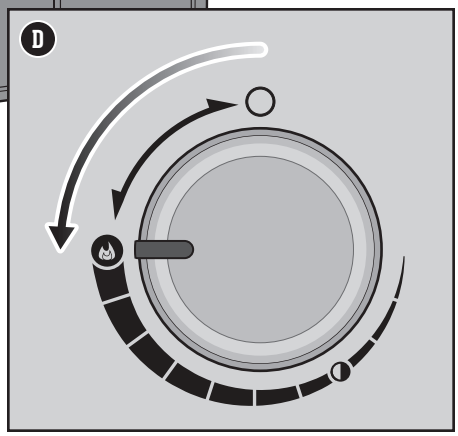

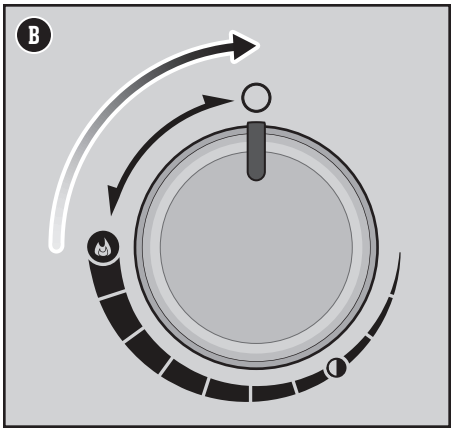

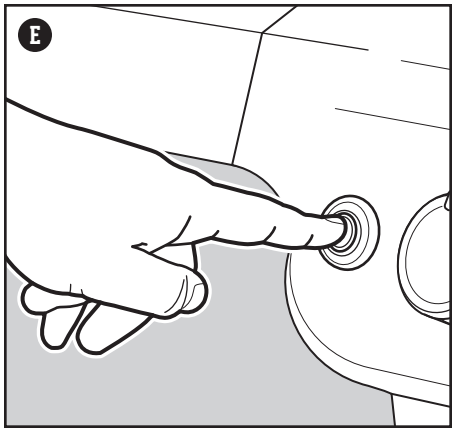

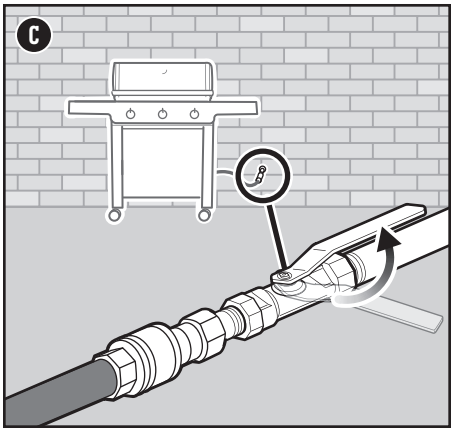

⚠ **WARNING: Open lid during ignition.**

⚠ **WARNING: Do not lean over open grill while igniting or cooking.**

⚠ **WARNING: Each burner must be ignited individually by pushing the electronic ignition button.**

⚠ **WARNING: If ignition does not occur within four seconds of attempting to light the first burner, turn the burner control knob to the off position. Wait five minutes to allow accumulated gas to dissipate, and then repeat the lighting procedure.**

Using the sear zone

Searing is a direct grilling technique used on meats, such as steak, poultry parts, fish and chops. Searing browns the surface of the food at a high temperature. By searing both sides of the meat, you caramelize the food surface, creating a more desirable flavor.

Ignition of the sear burner is the same as ignition of a main burner, each burner ignites independently.

1) Open the lid and ignite all of the burners, including the sear burner. Refer to USING THE ELECTRONIC IGNITION SYSTEM TO IGNITE THE GRILL.
2) Preheat the grill with the lid closed and with all burners on the start/high position for 15 minutes.
3) After preheating, leave the sear burner control knob and the adjacent burner control knobs in the start/high position **(A)**. The sear burner works in tandem with adjacent burners **(B)**. The remaining burner(s) can be turned to off or low.
4) Place meat directly over the sear zone and close lid. Sear each side anywhere from one to four minutes **(C)**, depending on the type and thickness of meat. Once searing is complete, the meat can be moved to moderate heat over and cooked to your desired doneness.

Note: Always cook with the lid closed to achieve maximum heat and to avoid flare-ups.

As you gain experience using the sear zone we encourage you to experiment with different searing times to find the results that work best for your taste.

To Extinguish Burners

1) Push each burner control knob in and then turn clockwise all the way to the off position.
2) Turn gas supply off.

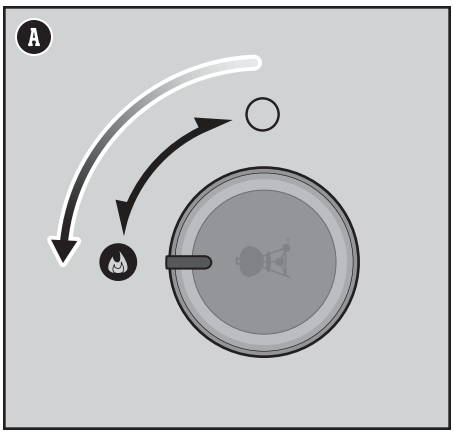

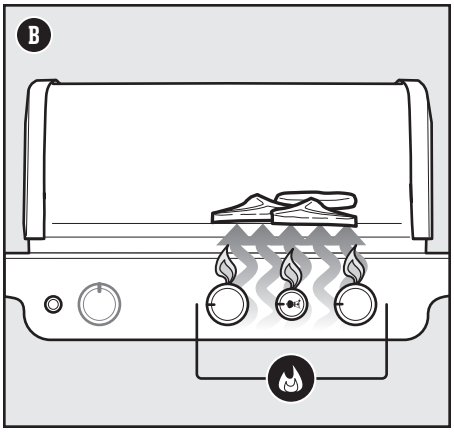

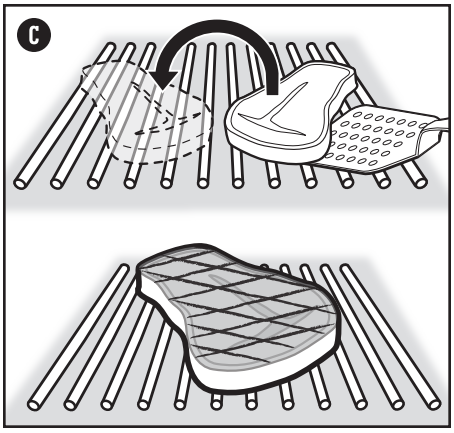

Igniting the Side Burner

Using the Electronic Ignition to Ignite the Side Burner

If one or more of the main burners on your grill are already lit and you would like to ignite the side burner, skip to step 3. If none of the main burners are lit and you are only using the side burner, start with step 1.

1) Check that the side burner control knob is in the off ○ position. Check by pushing in and turning knob clockwise **(A)**. Also check that all main burner control knobs are in the off ○ position.
2) Turn the gas supply valve on.
3) Open the side burner lid **(B)**.
4) Push in and turn side burner control knob counterclockwise to start/high position **(C)**.
5) Push and hold in the electronic ignition button **(D)**. You will hear the igniter clicking. Check that the side burner is lit. The side burner flame may be difficult to see on a bright sunny day.
6) Once side burner is ignited, continue turning the knob counterclockwise until you reach the desired position.
7) If the side burner does not ignite within 4 seconds, turn side burner control knob to the off ○ position and wait five minutes to allow the gas to clear before attempting to light the burner again.

Should the side burner fail to ignite using the electronic ignition, refer to the TROUBLESHOOTING section. There you will find instructions on igniting the side burner with a match to help determine the exact problem.

To Extinguish Side Burner

1) Push side burner control knob in and then turn clockwise all the way to the off ○ position.
2) Turn gas supply off.

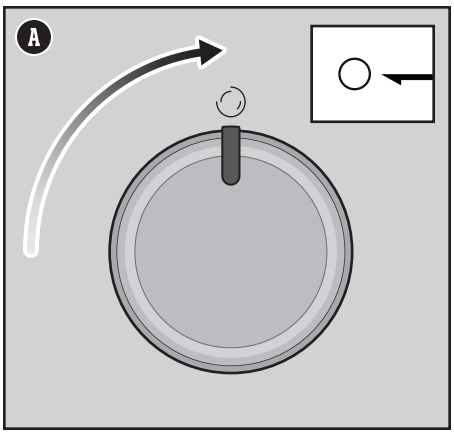

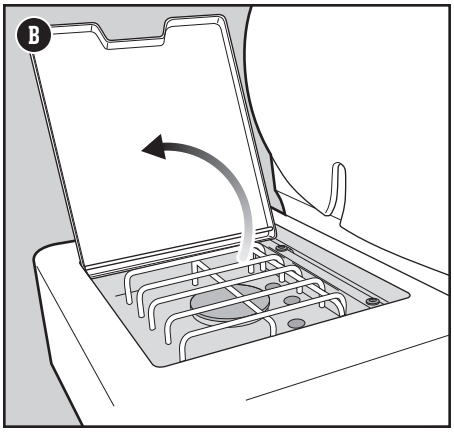

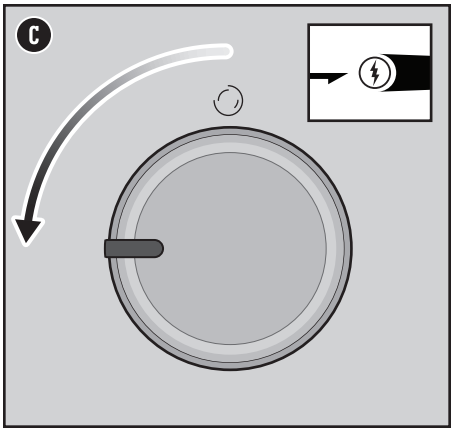

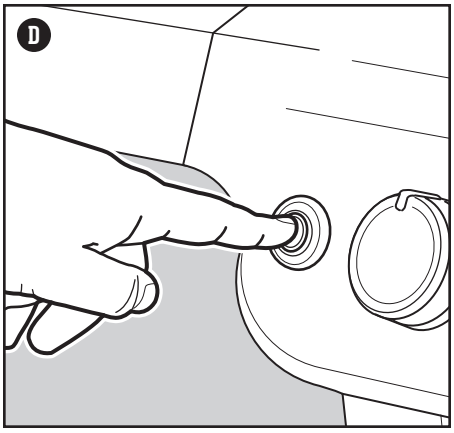

⚠ WARNING: Open side burner lid during ignition.

⚠ WARNING: Do not lean over side burner while igniting or cooking.

⚠ WARNING: If ignition does not occur within four seconds of attempting to light the side burner, turn the burner control knob to the off position. Wait five minutes to allow accumulated gas to dissipate, and then repeat the lighting procedure.

The Flame - Direct or Indirect

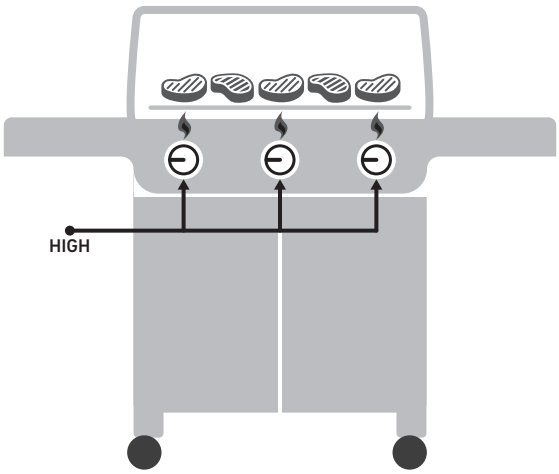

DIRECT HEAT SETUP

Use the direct method for small, tender pieces of food that take less than 20 minutes to cook, such as: hamburgers, steaks, chops, kabobs, boneless chicken pieces, fish fillets, shellfish, and sliced vegetables.

With direct heat, the fire is right below the food. It sears the surfaces of the food, developing flavors, texture, and delicious caramelization while cooking the food all the way to the center.

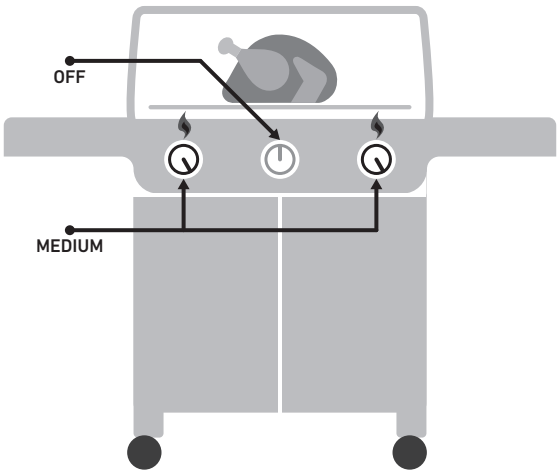

INDIRECT HEAT SETUP

Use the indirect method for larger cuts of meat that require 20 minutes or more of grilling time, or for foods so delicate that direct exposure to the heat would dry them out or scorch them, such as: roasts, bone-in poultry pieces, whole fish, delicate fish fillets, whole chickens, turkeys, and ribs. Indirect heat can also be used for finishing thicker foods or bone-in cuts that have been seared or browned first over direct heat.

With indirect heat, the heat is on both sides of the grill, or off to one side of the grill. The food sits over the unlit part on the cooking grate.

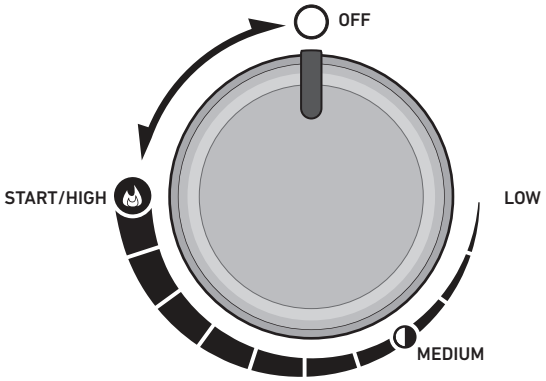



BARBECUE MITTS

When in doubt, wear them. The good ones are insulated and protect both hand and forearm.

Discover What's Possible

WEBER CRAFTED Outdoor Kitchen Collection Ready

This feature is only available on select models.

Some models are Outdoor Kitchen Collection Ready with the included Grates and Frame. Remove the right-hand cooking grate. Place the Frame on the right-hand side of the cookbox for the widest range of heat control **(A)**.
The Spacer included with your grill is used only when cooking with the WEBER CRAFTED Outdoor Kitchen Collection **(B)**.

Look for these and other accessories on weber.com.

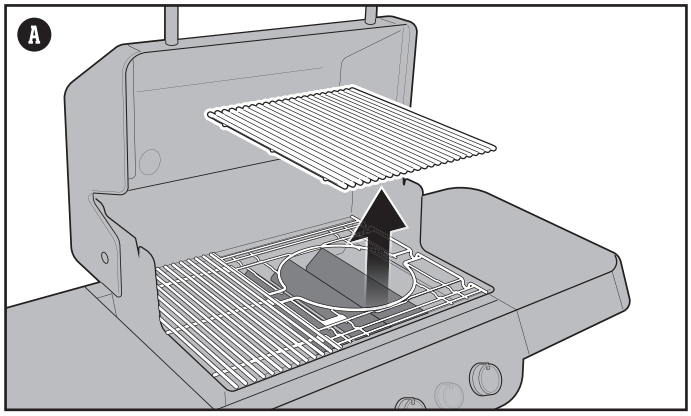

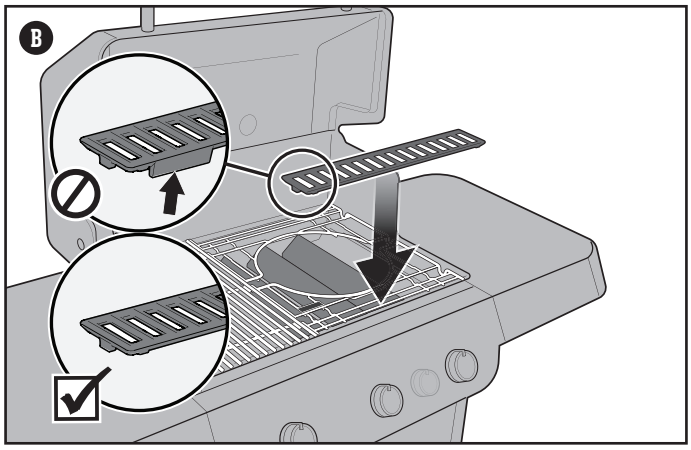

Grilling Do's and Don'ts

Preheat each and every time.

If the cooking grates aren't hot enough, food will stick, and you will likely never have a chance of searing properly or developing those handsome grill marks. Even if a recipe calls for medium or low heat, always preheat the grill on the highest setting first. Open the lid, turn up the heat, close the lid, and then let the cooking grate heat up for 15 minutes on high.

Don't grill on dirty grates.

Tossing food onto the cooking grates before they have been cleaned is never a good idea. Leftover "stuff" on the grates acts like glue, binding it to the grates and your new food. To avoid tasting last night's dinner on today's lunch, make sure you are grilling on a clean cooking grate. Once the grates are preheated, use a stainless steel bristle grill brush to make a clean, smooth surface.

Be present in the process.

Before firing up your grill, make sure that everything you need is within arm's reach. Don't forget your essential grilling tools, already oiled and seasoned food, glazes or sauces, and clean cooking platters for cooked food. Having to run back to your kitchen not only means missing out on the fun, but could also result in burning your food. French chefs call this "mise en place" (meaning, "put in place"). We call it "being present".

Create a little elbow room.

Packing too much food onto the cooking grates restricts your flexibility. Leave at least one-quarter of the cooking grates clear, with plenty of space between each food item, in order to get your tongs in there and easily move the food around. Sometimes grilling involves split-second decisions and the ability to jockey food from one area to another. So give yourself enough room to operate.

Try not to peek.

The lid on your grill is for more than just keeping the rain out. Most importantly, it's for preventing too much air from getting in, and too much heat and smoke from getting out. When the lid is closed, the cooking grates are hotter, the grilling times are faster, the smoky tastes are stronger, and the flare-ups are fewer. So put a lid on it!

Only flip once.

What's better than a juicy steak with a deep sear and plenty of beautifully caramelized bits? The key to accomplishing these results is to keep your food in place. Sometimes we have the tendency to flip our food before it reaches the desirable level of color and flavor. In nearly all cases, you should turn food just once. If fiddling with it more than that, you are probably also opening the lid too much, which causes its own set of problems. So step back and trust the grill.

Know when to tame the flame.

When grilling, sometimes the most important thing to know is when to stop. The most reliable way to test doneness of your food is to invest in an instant-read thermometer. This slim little gem will help you pinpoint that critical moment when your food is at its best.

Don't be afraid to experiment.

Back in the 1950s, grilling meant one thing: meat (and only meat) charred over open flames. The modern day backyard chef doesn't need a kitchen in order to prepare a full course meal. Use your grill to make char-grilled appetizers, sides, and even desserts. Register your grill to receive special content that will inspire you along the way. We'd love to join you on your grilling adventures.

Real Smoke Flavor

Using the Smoker Box

This feature is only available on select models.

Use dry wood chips in the smoker box as they ignite quickly and create smoke faster. For longer cooking foods such as roasts, chicken, and turkeys, etc., fill the entire legth of the smoker box with wood chips. The wood chips will ignite on the end of the smoker box which is positioned over the burner and slowly continue to burn inside the smoker box to provide smoke throughout the cook. As you gain experience in using your smoker, we encourage you to experiment with different combinations of wood chips to find the smoke flavor that best suits your taste.

Option 1: Setting up for Indirect Cooking

1) Open the grill lid.
2) Check that all burner control knobs are in the off ○ position and the grill is cool. Check by pushing in and turning knobs clockwise.
3) Remove the cooking grates to expose the FLAVORIZER BARS **(A)**.
4) Open the lid of the smoker box.
5) Fill the smoker box with wood chips from end to end **(B)**. Close the smoker box lid.
6) With the grill off, position the smoker box over the two right-hand side FLAVORIZER BARS, near the front of the grill, making sure only the narrow end with the WEBER logo will be directly over a lit burner **(C)**. This is the end where the wood chips ignite first. The main body of the smoker box aligns on a FLAVORIZER BAR without a lit burner beneath it.
7) Add water to the water pan of the smoker box **(D)** for more flavorful smoke during the cook.
8) Reinstall the cooking grates over the smoker box **(E)**.
9) Ignite the grill and preheat for 10 minutes with only the main burners on high. Refer to "Igniting the Grill". After preheating, turn off center burner and reduce outer burners to low **(F)**.

Smoke will start in approximately 10 minutes and last as long as 90 minutes. Do not attempt to move hot components to refill the smoker with wood chips. Keep the lid of the grill closed while cooking.

Option 2: Setting up for Direct Cooking

The smoker box is positioned where the Weber logo is over the center burner during grilling, with main burners set on low **(G)**.

Notes:
For best smoking results, burners in use should be on low. Do not place the main body of the smoker box directly over a burner. This could ignite all of the wood chips at once resulting in reduced smoking times.

Always grill with the lid closed to allow the smoke to fully penetrate the food.

When you're finished smoking, turn burners off and close the grill lid until the wood chips have extinguished.

Remove smoker box from the grill if not in use.

Cleaning the Smoker Box

Before each use, empty the smoker of ash to allow proper air flow.

Note: Smoking will leave a "smoke" residue on the surface of the smoker. This residue cannot be removed and will not affect the function of the smoker. To a lesser degree, a "smoke" residue will accumulate on the inside of your gas grill. This residue need not be removed and will not adversely affect the function of your gas grill.

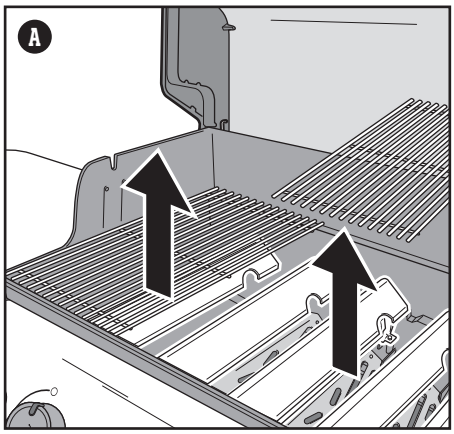

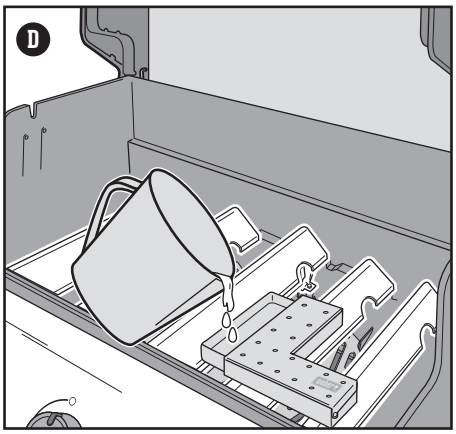

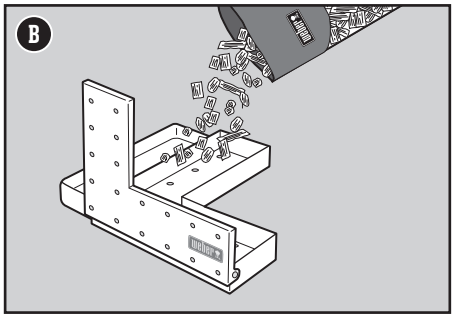

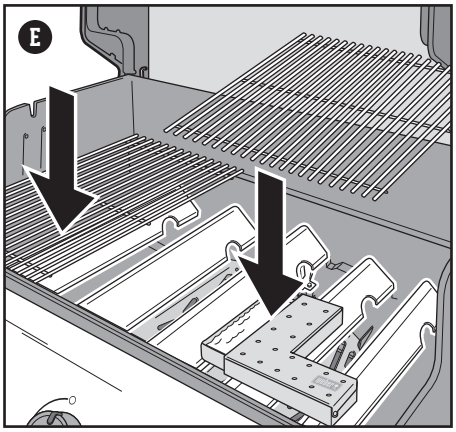

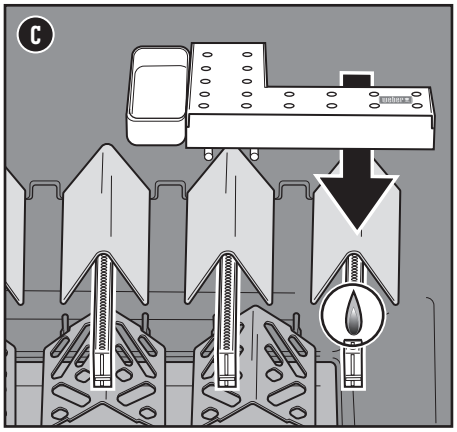

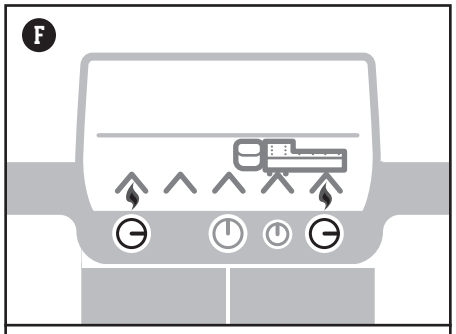

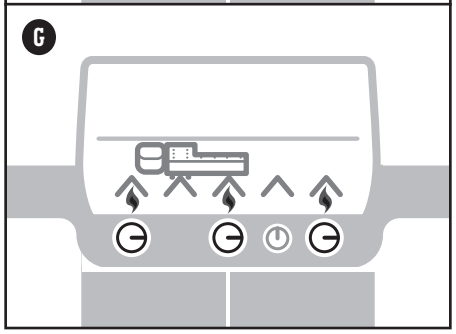

⚠ DANGER: Do not use any flammable fluid or combustible products in the smoker to ignite the wood chips. This will cause serious bodily injury.

⚠ WARNING: Do not remove hot components from the grill while in use.

⚠ WARNING: Never use wood that has been treated or exposed to chemicals.

⚠ Always avoid soft, resinous woods like pine, cedar, and aspen.

	APPLE FIRESPICE	CHERRY FIRESPICE	PECAN FIRESPICE	HICKORY FIRESPICE	MESQUITE FIRESPICE
	✓	✓	✓		
	✓	✓	✓	✓	
	✓	✓	✓	✓	✓
			✓		✓
			✓	✓	✓
	✓	✓			

Extra on the Side

WEBER CRAFTED Grill Locker

This feature is only available on select models.

The side storage area **(A)** is ideal for storing accessories and grillware.
Adjustable condiment basket keeps smaller items close at hand.

Always make sure the rubber mat is in place to protect surfaces.

Storage Hooks

Use the double-sided hooks on the side of the cabinet **(B)** for convenient storage of cooking grates on the outside of the grill. Additional hooks on the inside of the cabinet store the WEBER CRAFTED spacer grate, which can be used with WEBER CRAFTED Outdoor Kitchen Collection grillware..

Note: Do not place hot cooking grates on storage hooks.

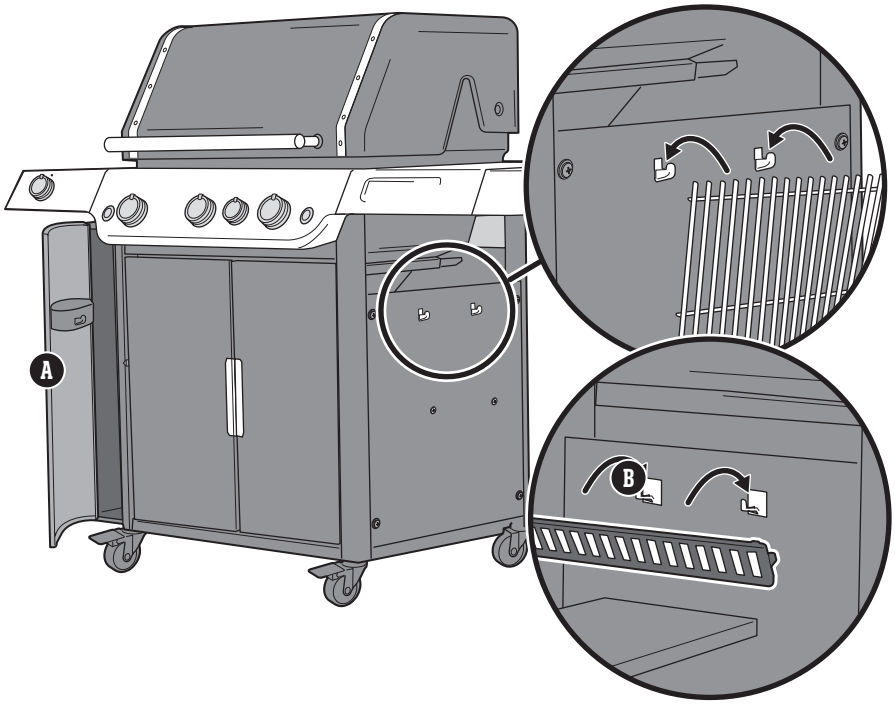

Grilling at Night

This feature is only available on select models.

Using the Grill Lighting

To activate the grill light press the awake button. The grill light has a tilt sensor that will turn on the light if the grill lid is opened and turn off the light when the grill lid is closed. If the lid is left open or closed for more than 30 minutes, the grill light will automatically deactivate. To turn the light back on, press the awake button.

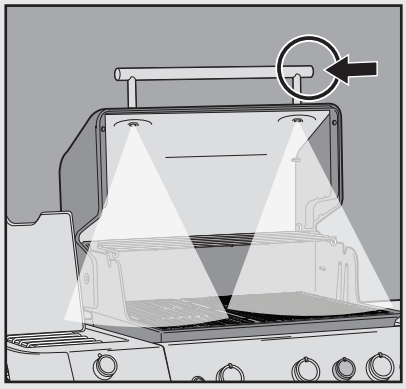

More Cooking Space

Using the Expandable Top Cooking Grate

Use it as a warming rack to keep food warm **(A)** or unfold it when you need a secondary cooking surface. To unfold, lift the front half of the grate slightly and rotate outward **(B)**. For storage, fold the grate and lift the entire grate from the cookbox **(C)**. Hang the grate vertically on the back edge of the cookbox. Use heat-resistant mitts or gloves when adjusting rack.

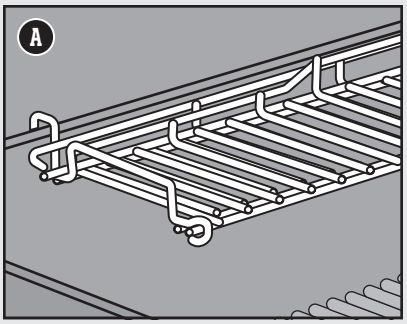

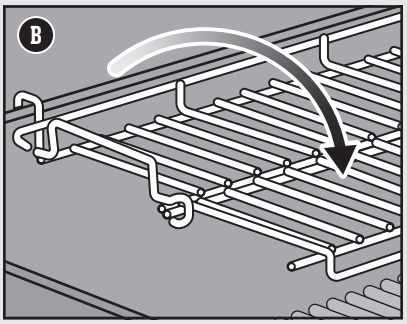

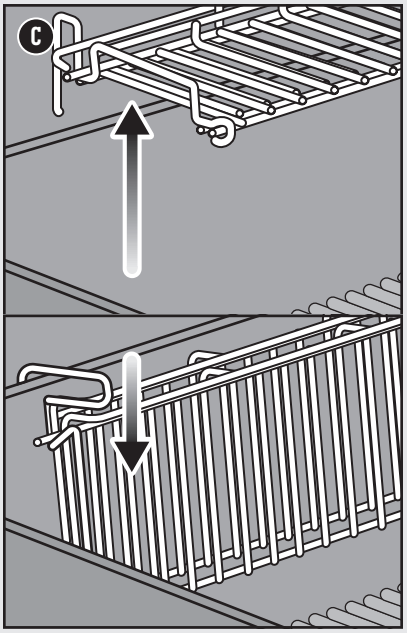

Cleaning and Maintenance

Cleaning the Inside of the Grill

Over time, the performance of your grill can diminish if it has not been maintained properly. Low temperatures, uneven heat, and food sticking to cooking grates are all signs that cleaning and maintenance are overdue. When your grill is off and cool, start by cleaning the inside, from the top down. A thorough cleaning is recommended at least twice a year. Consistent use may require quarterly cleanings.

Cleaning the Lid

From time to time you may notice "paint-like" flakes on the inside of the lid. During use, grease and smoke vapors slowly change into carbon and deposit on the inside of your lid. These deposits will eventually peel, and looks very similar to paint. These deposits are non-toxic, but the flakes could fall onto your food if you do not clean the lid regularly.

1) Brush the carbonized grease from the inside of the lid with a stainless steel bristle grill brush **(A)**. To minimize further build-up, the inside of the lid can be wiped with a paper towel after grilling while the grill is still warm (not hot).

Cleaning the Cooking Grates

If you have been cleaning your cooking grates as recommended, the debris on your grates should be minimal.

1) With grates installed, brush the debris off your cooking grate with a stainless steel bristle grill brush **(B)**.
2) Take the grates out and set aside.

Cleaning the FLAVORIZER BARS

FLAVORIZER BARS catch drippings that smoke and sizzle, adding flavor to your food. Any drippings that are not vaporized by the FLAVORIZER BARS are funneled away from the burners. This helps prevent flare-ups inside of your grill, and protects the burners from getting clogged.

1) Scrape the FLAVORIZER BARS with a plastic scraper **(C)**.
2) If necessary, brush the FLAVORIZER BARS with a stainless steel bristle grill brush.
3) Remove FLAVORIZER BARS and set aside.

Cleaning the Burners

Two areas on the burners that are key to optimum performance are the ports (small raised openings running along the length of the burners) and the spider/insect screens on the ends of the burner. Keeping these areas clean is essential for safe operation.

Cleaning the Burner Ports

1) Use a clean stainless steel bristle grill brush to clean the outside of the burners by brushing across the top of the burner ports **(D)**.
2) When cleaning the burners, avoid damaging the ignition electrode by carefully brushing around it **(E)**.

Cleaning the Spider Screens

1) Locate the ends of the burners on the underside of the control panel where they meet the valves.
2) Clean the spider/insect screens on each of the burners using a soft bristle brush **(F)**.

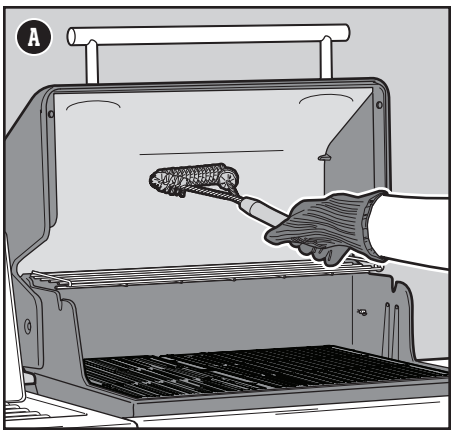

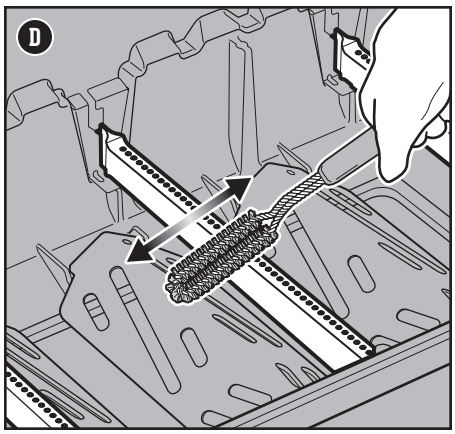

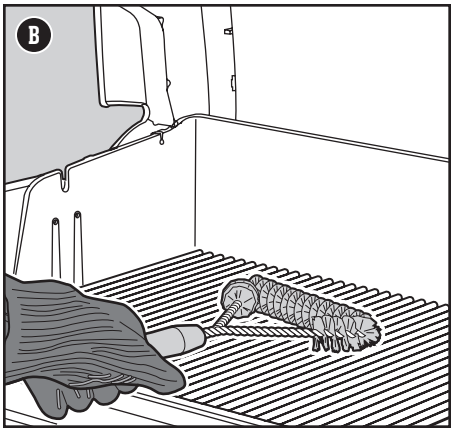

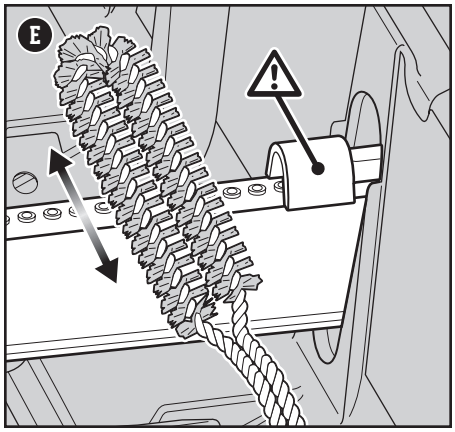

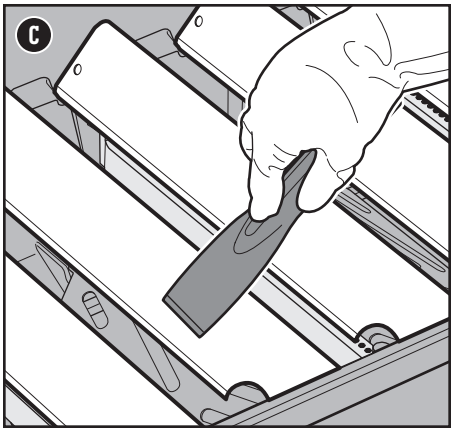

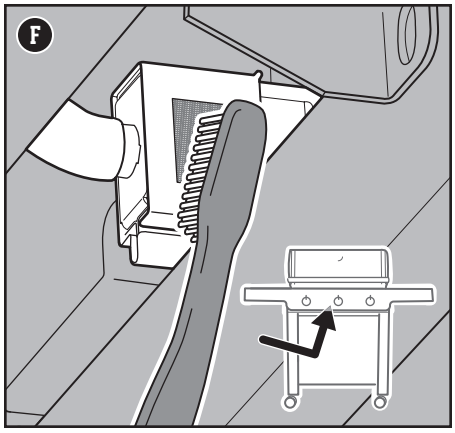

⚠ WARNING: Turn your grill off and wait for it to cool before thoroughly cleaning.

⚠ WARNING: Over time, the development of rough surfaces can form on the FLAVORIZER BARS. Wearing gloves is recommended when handling. Do not clean FLAVORIZER BARS or cooking grates in a sink, dishwasher, or self-cleaning oven.

⚠ WARNING: When cleaning the burners, never use a brush that has already been used to clean the cooking grates. Never put sharp objects into the burner port holes.

⚠ CAUTION: Do not place any grill components onto the side tables as they may scratch the paint or stainless steel surfaces.

⚠ CAUTION: Do not use any of the following to clean your grill: abrasive stainless steel polishes or paints, cleaners that contain acid, mineral spirits or xylene, oven cleaner, abrasive cleansers (kitchen cleansers), or abrasive cleaning pads.

Cleaning the Heat Deflectors

Located under the burners, the heat deflectors distribute heat evenly throughout the cookbox while cooking. Keeping heat deflectors clean will enhance the cooking performance of your grill.

1) Scrape the heat deflectors with a plastic scraper **(G)**.
2) If necessary, brush the heat deflectors with a stainless steel bristle grill brush.
3) Remove heat deflectors and set aside.

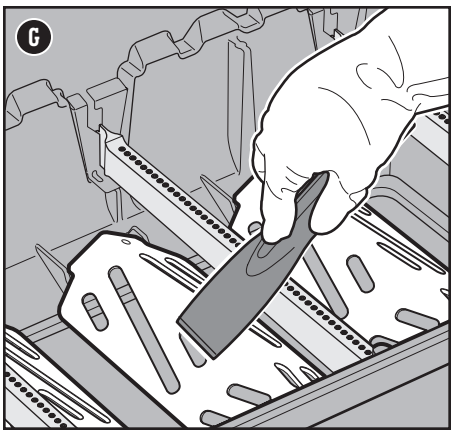

Cleaning the Cookbox

Look inside the cookbox for any grease accumulation or leftover food particles. Excessive accumulation can cause a fire.

1) Use a plastic scraper to scrape debris off the sides and bottom of the grill into the opening in bottom of the cookbox **(H)**. This opening leads debris into the slide-out grease tray.

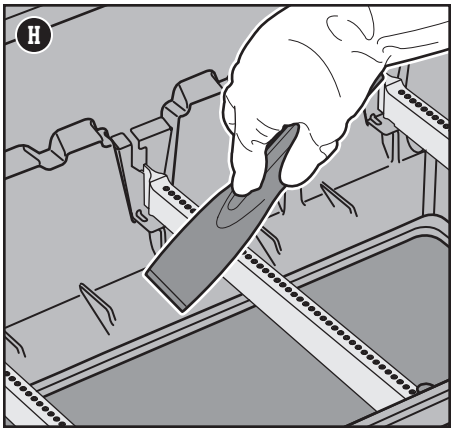

Cleaning the Grease Management System

The grease management system consists of an angled slide-out grease tray and a catch pan. These components were designed to be easily removed, cleaned, and replaced; an essential step every time you prepare to grill. Instructions on inspecting the grease management system can be found in MEAL-TO-MEAL MAINTENANCE.

Cleaning the Outside of the Grill

The outside of your grill may include stainless steel, porcelain-enameled, and plastic surfaces. WEBER recommends the following methods based on the surface type.

Cleaning Stainless Steel Surfaces

Clean stainless steel using a non-toxic, non-abrasive stainless steel cleaner or polish designed for use on outdoor products and grills. Use a microfiber cloth to clean in the direction of the grain of the stainless steel. Do not use paper towels.

Note: Do not risk scratching your stainless steel with abrasive pastes. Pastes do not clean or polish. They will change the color of the metal by removing the top chromium oxide film coating.

Cleaning Painted, Porcelain-Enameled Surfaces and Plastic Components

Clean painted, porcelain-enameled and plastic components with warm soapy water, and paper towels or cloth. After wiping down the surfaces, rinse and dry thoroughly.

Cleaning the Outside of Grills that are in Unique Environments

If your grill is subject to a particularly harsh environment, you will want to clean the outside more often. Acid rain, pool chemicals, and salt water can cause surface rusting to appear. Wipe down the outside of your grill with warm soapy water. Follow up with a rinse and thorough drying. Additionally, you may want to apply a stainless steel cleaner weekly to prevent surface rust.

MUST-HAVE GRILLING TOOLS • MUST-HAVE GRILLING TOOLS • MUST-HAVE GRILLING TOOLS • MUST-HAVE GRILLING TOOLS •

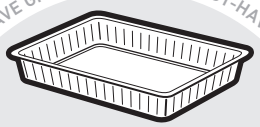

FOIL PANS

Perfect for lining the catch pan to make cleanup convenient and easy.



GRILL BRUSH

A must-use before you even dream of grilling. A quick once-over on hot grates prevents the charred remains of meals past from sticking to your meals present.

MAIN BURNER(S) or SIDE BURNER WILL NOT IGNITE

SYMPTOM

- Main burners or side burner do(es) not ignite when following the electronic ignition instructions in the "Operation" section of this owner's manual.

CAUSE	SOLUTION
There is a problem with gas flow.	If any burner does not ignite, the first step is to determine if there is gas flowing to the burner(s). To check this, follow the instructions below for "Lighting Your Grill with a Match." If **match lighting IS NOT successful**, follow the "GAS FLOW" troubleshooting suggestions on the next page.
There is a problem with the electronic ignition system.	If any burner does not ignite, the first step is to determine if there is gas flowing to the burner(s). To check this, follow the instructions below for "Lighting Your Grill with a Match." If **match lighting IS successful**, follow the instructions for "Checking the Components of the Electronic Ignition System."

Lighting Your Grill with a Match

Using a Match to Determine if there is Gas Flow to the Main Burners

1) Open the grill lid.
2) Check that all burner control knobs (including side burner control knob) are in the off ○ position. Check by pushing in and turning knobs clockwise.
3) Turn the gas supply valve on.
4) Begin with the burner furthest to the left. Put match in the matchstick holder and strike match. (Matchstick holder is located under left side table.) Insert lit match down through the cooking grates, past the FLAVORIZER bars and next to the burner **(A)**.
5) Push the burner control knob in and slowly turn it counterclockwise toward the start/high position.
6) Check that the burner is lit by looking through the cooking grates and through the cutout in the FLAVORIZER bar.
7) If the burner does not ignite within 4 seconds, turn burner control knob to the off ○ position and wait five minutes to allow the gas to clear before attempting to light the burner again. If repeated attempts fail, follow the gas flow troubleshooting instructions on the next page.
8) If the burner ignites, the problem lies in the ignition system. Follow the instructions for "Checking the Components of the Electronic Ignition System".
9) Replace the matchstick holder by hanging underneath left side table **(B)**.

Using a Match to Determine if there is Gas Flow to the Side Burner

1) Open the side burner lid.
2) Check that the side burner control knob is in the off ○ position. Check by pushing in and turning knob clockwise. Also check that all main burner control knobs are in the off ○ position.
3) Turn the gas supply valve on.
4) Put match in the matchstick holder and strike match. (Matchstick holder is located under left side table.) Hold lit match by the side burner **(C)**.
5) Push the side burner control knob in and slowly turn it counterclockwise toward the start/high position.
6) Check that the side burner is lit. The side burner flame may be difficult to see on a bright sunny day.
7) If the side burner does not ignite within 4 seconds, turn side burner control knob to the off ○ position and wait five minutes to allow the gas to clear before attempting to light the burner again. If repeated attempts fail, follow the gas flow troubleshooting instructions on the next page.
8) If the burner ignites, follow the instructions for "Checking the Components of the Electronic Ignition System".

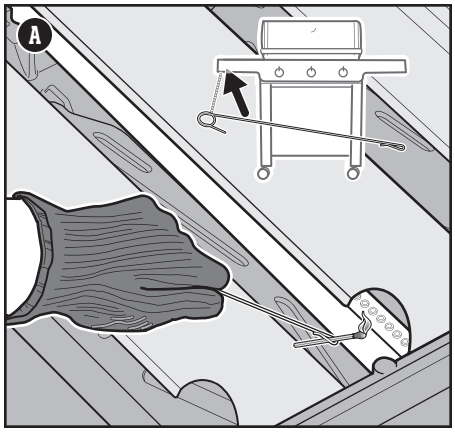

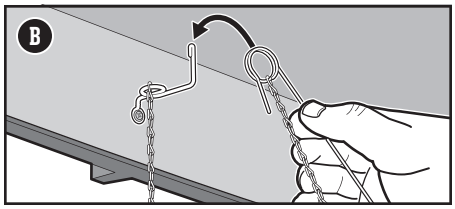

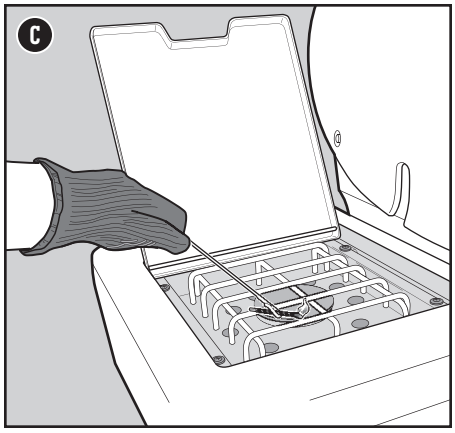

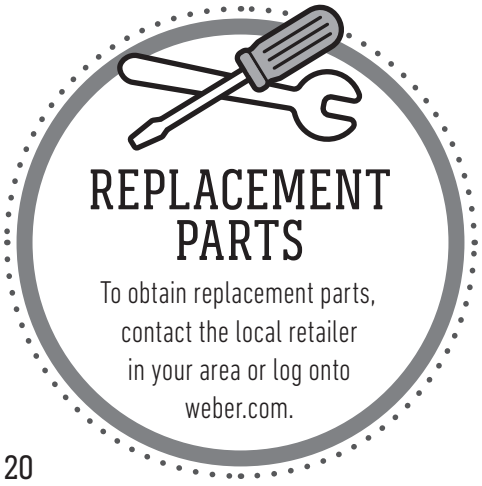

GAS FLOW

SYMPTOM

- Grill does not reach desired temperature or heats unevenly.
- One or more of the burners fail to ignite.
- Flame is low when burner is on high position.
- Flames do not run the whole length of the burner.
- Burner flame pattern is erratic.

CAUSE	SOLUTION
Fuel hose is bent or kinked.	Straighten fuel hose.
Burner ports are dirty.	Clean burner ports. Refer to "Cleaning the Burner Ports."

SYMPTOM

- Gas is smelled in conjunction with burner flames that appear yellow and lazy.

CAUSE	SOLUTION
Spider screens on the burners are obstructed.	Clean spider screens. Refer to "Cleaning the Spider Screens" in the Product Care section. Also refer to the illustrations and information in this section about proper flame pattern and spider screens.

Proper Burner Flame Pattern

The burners in your grill were factory set for the correct air and gas mixture. When the burners are performing correctly, you will see a specific flame pattern. The tips may occasionally flicker yellow **(A)**, with a descending light blue **(B)** to dark blue flame **(C)**.

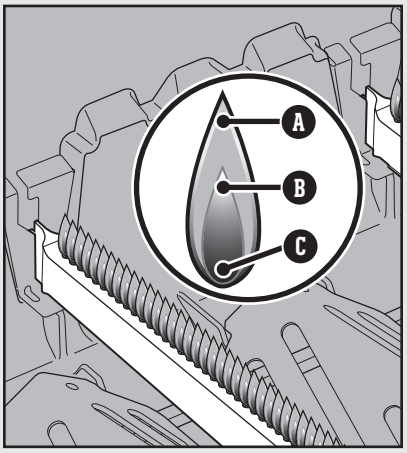

Spider Screens

The combustion air openings of the burners **(D)** are fitted with stainless steel screens to prevent spiders and other insects from spinning webs and building nests inside the burners. Additionally, dust and debris can accumulate on the outside of the spider/insect screen and obstruct the oxygen flow to the burners.

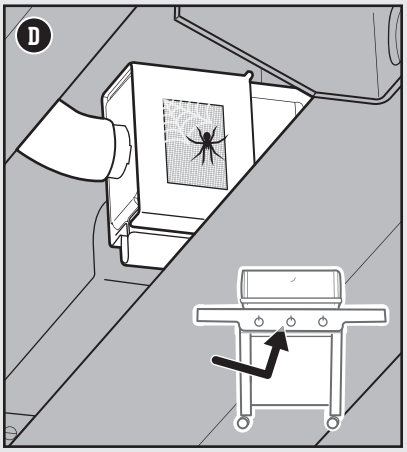

⚠ WARNING: Do not attempt to make any repair to gas carrying, gas burning, ignition components or structural components without contacting Weber-Stephen Products LLC, Customer Service Department.

⚠ CAUTION: The burner tube openings must be positioned properly over the valve orifices.

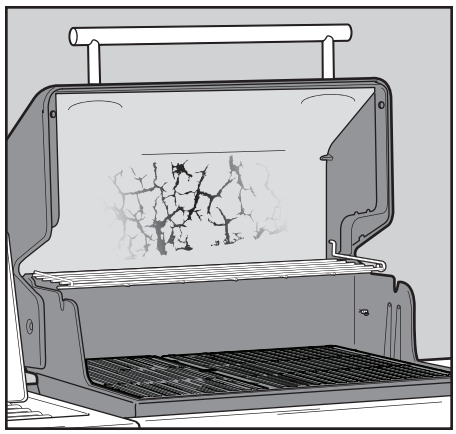

GREASY GRILL (Peeling Paint & Flare-Ups)

SYMPTOM

· Inside of lid appears to have the appearance of peeling paint.

CAUSE	SOLUTION
The flakes you see are accumulated cooking vapors that have turned into carbon.	This happens over time after repeated use of your grill. This is not a defect. Clean the lid. Refer to the "Product Care" section.

SYMPTOM

· Experiencing flare-ups when grilling or preheating.

CAUSE	SOLUTION
There is leftover food from the previous meal.	Always preheat the grill on the highest setting for 10 to 15 minutes.
The inside of the grill needs to be cleaned thoroughly.	Follow the steps in the "Cleaning and Maintenance" section to clean the grill inside from the top down.

Replacing Batteries for the Grill Lighting

Use alkaline batteries only. Do not mix old and new batteries or different types of batteries (standard, alkaline, or rechargeable). If you do not plan to use the grill for a month or more, remove the batteries.

1) Close the lid. Locate the battery housing on the side of the lid handle and unscrew the cap **(A)**. Do not change batteries with the lid open.
2) Remove the battery sleeve.
3) Replace three size C batteries **(B)**.
4) Line up graphic indicators **(C)** on the sleeve and handle as you reinstall the sleeve. Tighten cap.

NOTE: Periodically wipe the lenses with a damp cloth to keep the lights illuminating brightly.

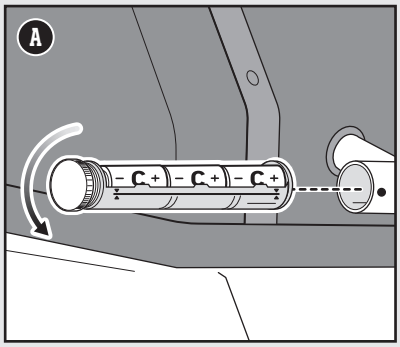

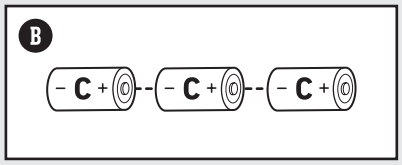

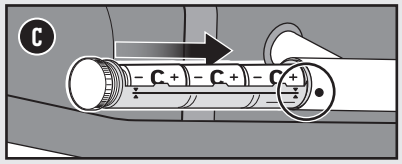

CALL CUSTOMER SERVICE

If you are still experiencing any problems, contact the Customer Service Representative in your area using the contact information on weber.com.

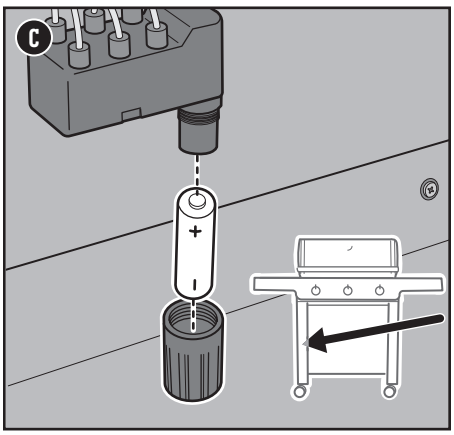

Checking the Components of the Electronic Ignition System

When pressing the ignition button you should hear a ticking sound. If you cannot hear the ticking sound, check the battery, then check the wires.

Checking the Battery

There are three potential issues with the battery that supplies the power to your ignition module that need to be checked:

1) Some batteries have a plastic protective wrap around them. (Do not confuse this plastic with the battery label.) Check that this plastic wrap is removed.
2) Confirm that the battery is installed correctly **(C)**.
3) If the battery is old, replace it with a new battery.

Checking the Wires

There are two potential trouble spots that need to be checked:

1) Check that the ignition wires are connected securely to the terminals on the ignition button under the control panel.
2) Make sure the ignition wires are properly attached to the ignition module. The wire terminals are color coded to correspond with the terminals on the ignition module. The number of wires will vary per model.

335 Igniter Module Wire Chart

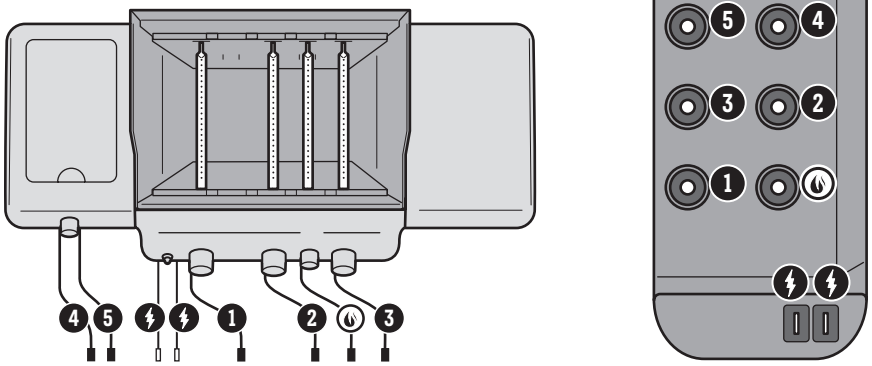

Checking the Ground Wire

Models 425s and 435 have a ground wire connected to the manifold bracket. This is visible from beneath the control panel **(D)**:

1) Check that the ground wire is properly secured with a screw.

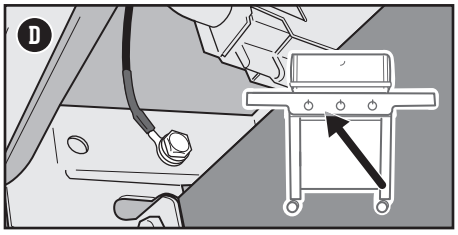

435 Igniter Module Wire Chart

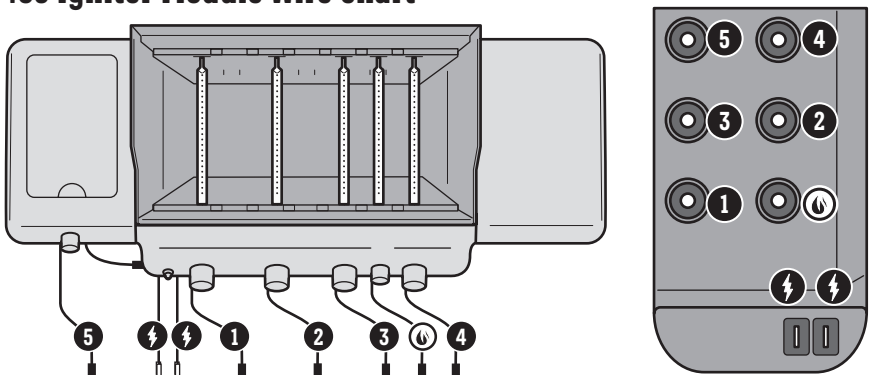

Grilling Guide

Type	Thickness/Weight	Approximate Total Grill Time
RED MEAT		
Steak: New York strip, porterhouse, rib-eye, T-bone, and filet mignon (tenderloin)	¾ inch (19 mm) thick	**4 to 6 minutes** direct high heat
	1 inch (25 mm) thick	**6 to 8 minutes** direct high heat
	2 inches (5 cm) thick	**14 to 18 minutes** sear 6 to 8 minutes direct high heat, then 8 to 10 minutes indirect high heat
Flank Steak	1½ to 2 pounds (0,68 - 0,91 kg), ¾ inch (19 mm) thick	**8 to 10 minutes** direct medium heat
Ground Beef Patty	¾ inch (19 mm) thick	**8 to 10 minutes** direct medium heat
Tenderloin	3 to 4 pounds (1,36 -1,81 kg)	**45 to 60 minutes** 15 minutes direct medium heat, then 30 to 45 minutes indirect medium heat
PORK		
Bratwurst: fresh	3 ounce (85 g) link	**20 to 25 minutes** direct low heat
Chop: boneless or bone in	¾ inch (19 mm) thick	**6 to 8 minutes** direct high heat
	1¼ to 1½ inches (3,18 - 3,81 cm) thick	**10 to 12 minutes** sear 6 minutes direct high heat, then 4 to 6 minutes indirect high heat
Ribs: baby back, spareribs	3 to 4 pounds (1,36 -1,81 kg)	**1½ to 2 hours** indirect medium heat
Ribs: country-style, bone in	3 to 4 pounds (1,36 -1,81 kg)	**1½ to 2 hours** indirect medium heat
Tenderloin	1 pound (0,45 kg)	**30 minutes** sear 5 minutes direct high heat, then 25 minutes indirect medium heat
POULTRY		
Chicken Breast: boneless, skinless	6 to 8 ounces (170-226 g)	**8 to 12 minutes** direct medium heat
Chicken Thigh: boneless, skinless	4 ounces (113g)	**8 to 10 minutes** direct medium heat
Chicken Pieces: bone in, assorted	3 to 6 ounces (85-170 g)	**36 to 40 minutes** 6 to 10 minutes direct low heat, then 30 minutes indirect medium heat
Chicken: whole	4 to 5 pounds (1,81-2,27 kg)	**1 to 1¼ hours** indirect medium heat
Cornish Game Hen	1½ to 2 pounds (0,68-0,91 kg)	**60 to 70 minutes** indirect medium heat
Turkey: whole, unstuffed	10 to 12 pounds (4,54-5,44 kg)	**2 to 2½ hours** indirect medium heat
SEAFOOD		
Fish, Fillet, or Steak: halibut, red snapper, salmon, sea bass, swordfish, and tuna	¼ to ½ inch (6,35-12,7 mm) thick	**3 to 5 minutes** direct medium heat
	1 to 1¼ inches (25-31 mm) thick	**10 to 12 minutes** direct medium heat
Fish: whole	1 pound (0,45 kg)	**15 to 20 minutes** indirect medium heat
	3 pounds (1,36 kg)	**30 to 45 minutes** indirect medium heat
Shrimp	1½ ounces (42,5 g)	**2 to 4 minutes** direct high heat
VEGETABLES		
Asparagus	½ inch (12,7 mm) diameter	**6 to 8 minutes** direct medium heat
Corn	in husk	**25 to 30 minutes** direct medium heat
	husked	**10 to 15 minutes** direct medium heat
Mushroom	shiitake or button	**8 to 10 minutes** direct medium heat
	portobello	**10 to 15 minutes** direct medium heat
Onion	halved	**35 to 40 minutes** indirect medium heat
	½ inch (12,7 mm) slices	**8 to 12 minutes** direct medium heat
Potato	whole	**45 to 60 minutes** indirect medium heat
	½ inch (12,7 mm) slices	**9 to 11 minutes** parboil 3 minutes, then 6 to 8 minutes direct medium heat

The cuts, thicknesses, weights, and grilling times above are meant to be guidelines. Factors such as altitude, wind, and outside temperature can affect cooking times. Two rules of thumb: Grill steaks, fish fillets, boneless chicken pieces, and vegetables using the direct method for the time given on the chart (or to the desired doneness), turning food once halfway through grilling time. Grill roasts, whole poultry, bone-in poultry pieces, whole fish, and thicker cuts using the indirect method for the time given on the chart (or until an instant-read thermometer registers the desired internal temperature). Cooking times for beef and lamb use the USDA's definition of medium doneness unless otherwise noted. Before carving, let roasts, larger cuts of meat, and thick chops and steaks rest for 5 to 10 minutes after cooking. The internal temperature of the meat will rise by 5 to 10 degrees during this time.

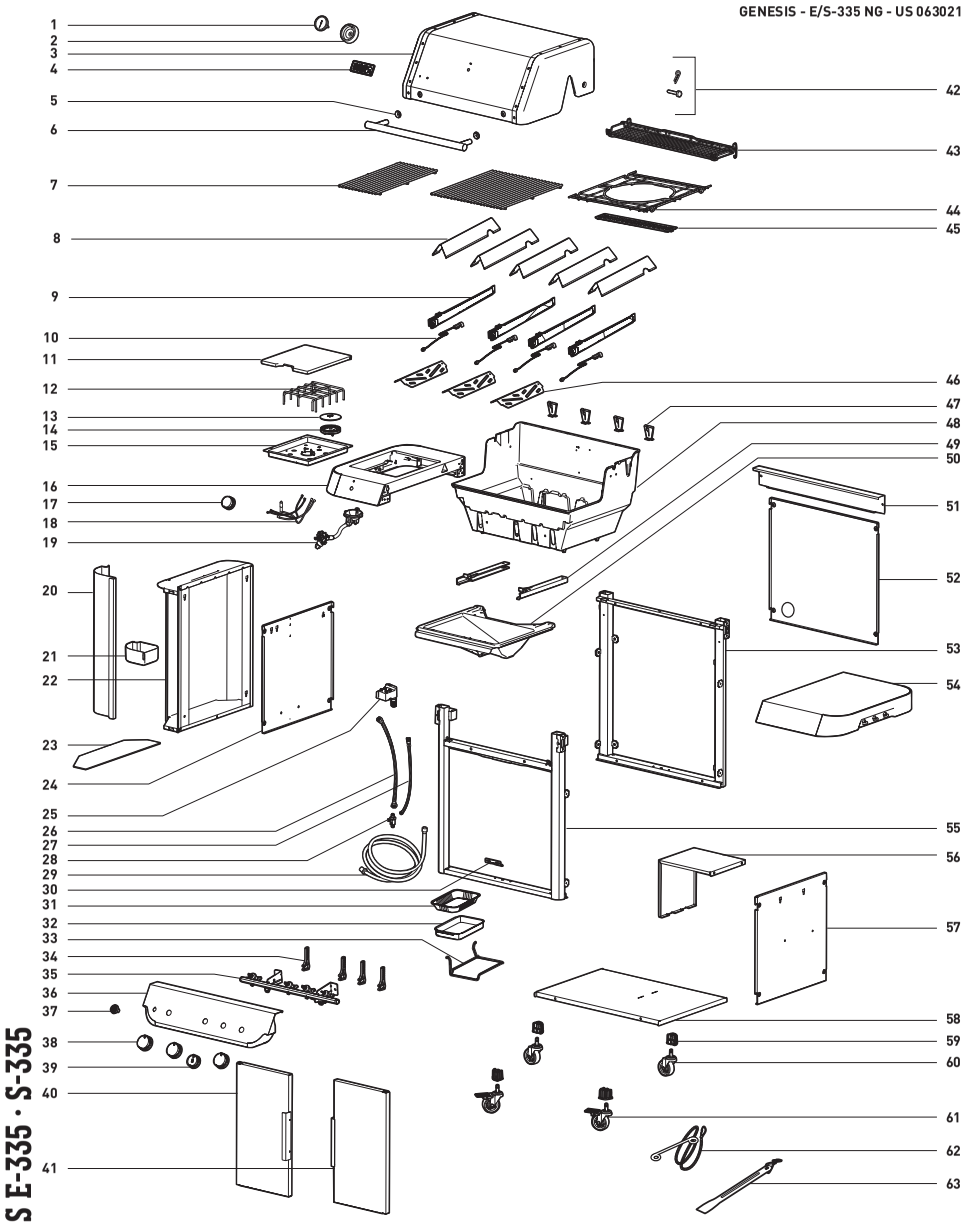

GENESIS E-335 · S-335

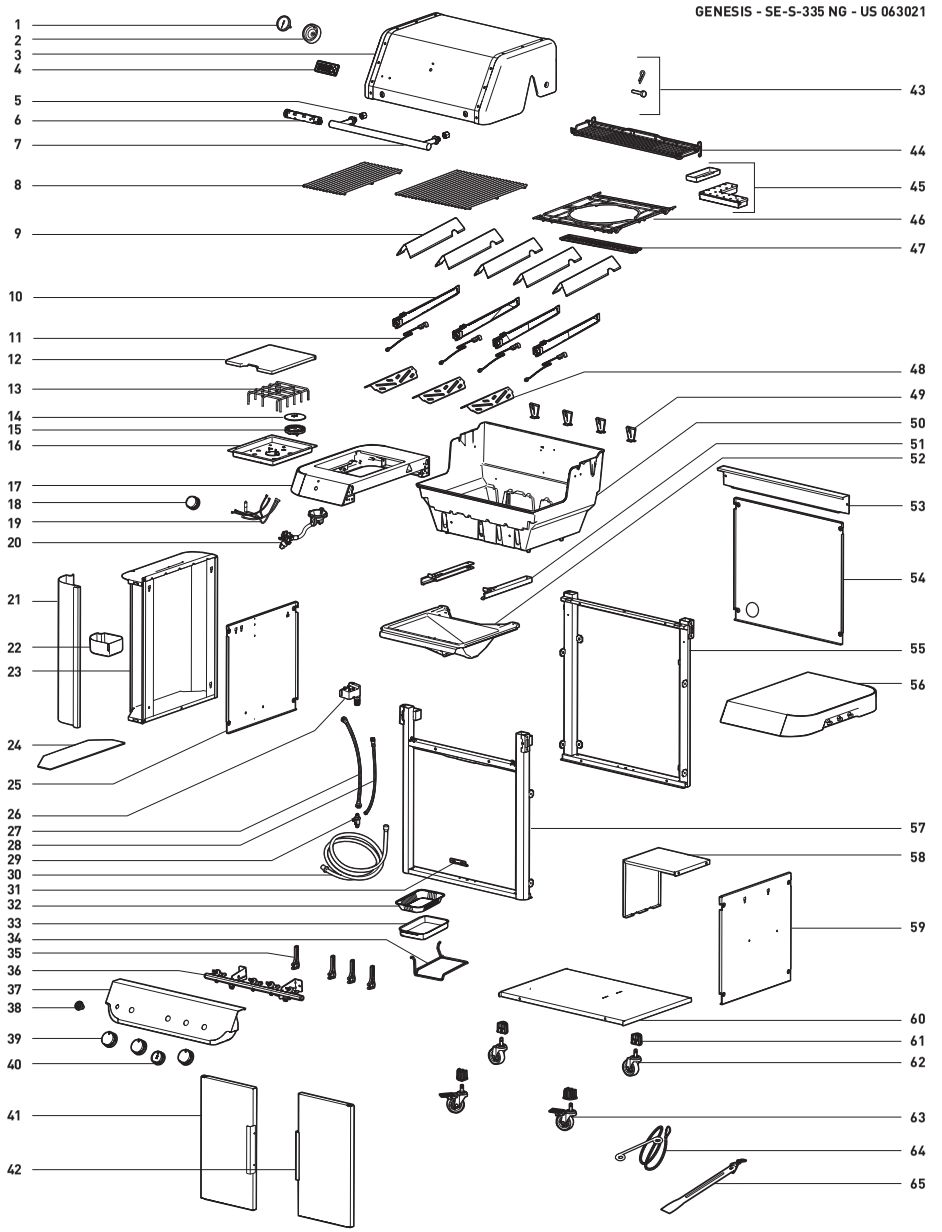

GENESIS SE-S-335

GENESIS E-435 · S-435

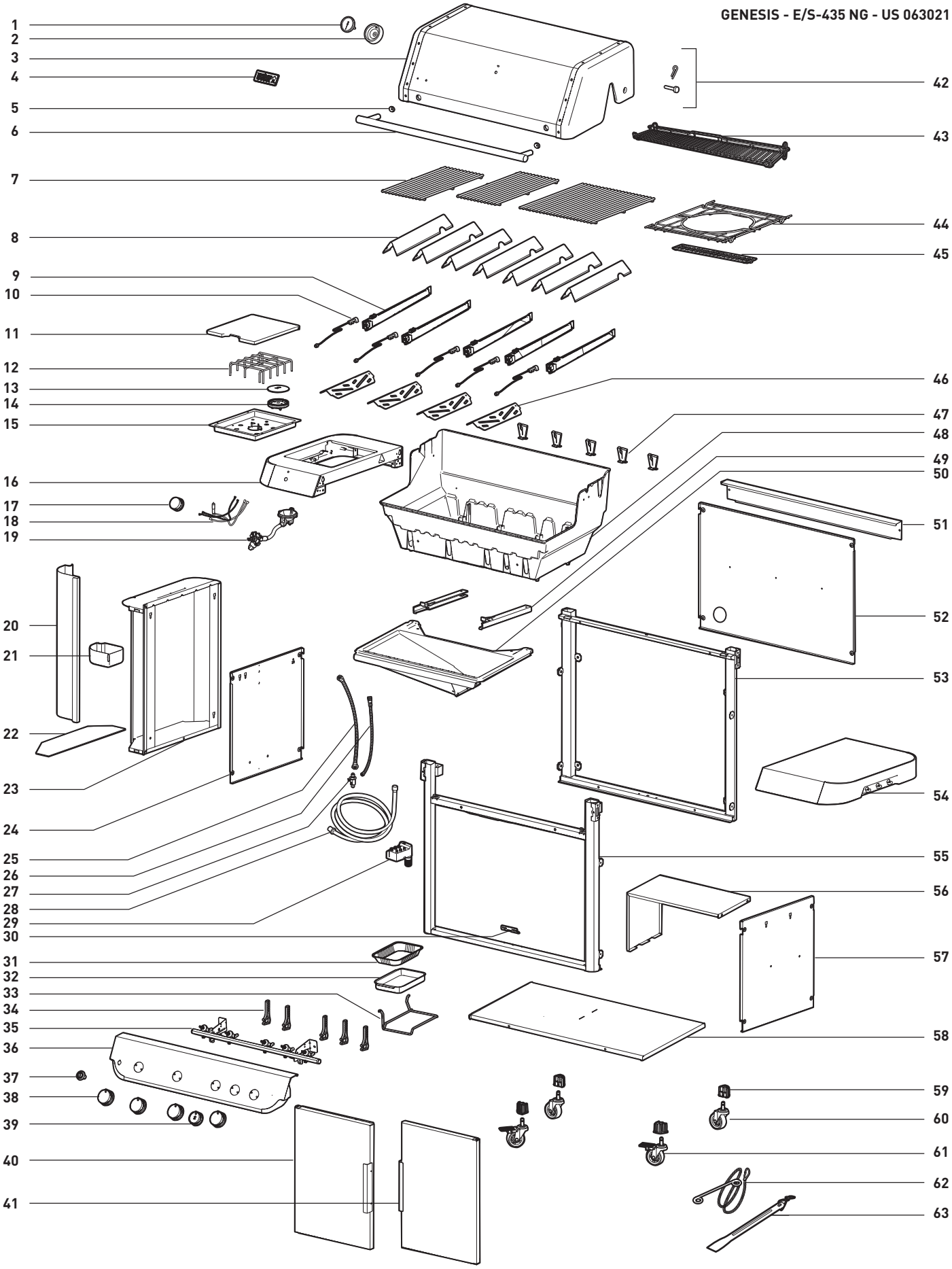

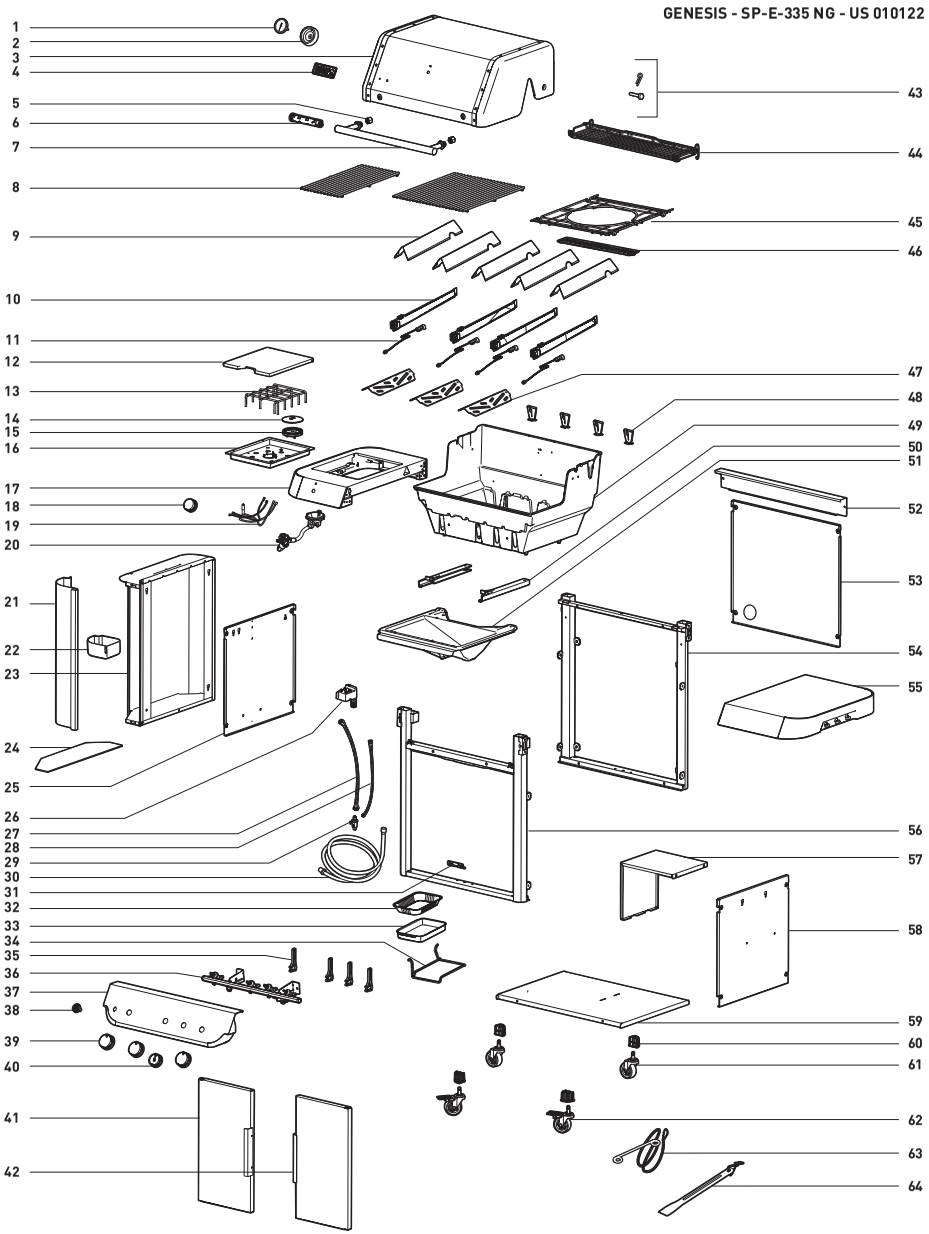

GENESIS SP-E-335

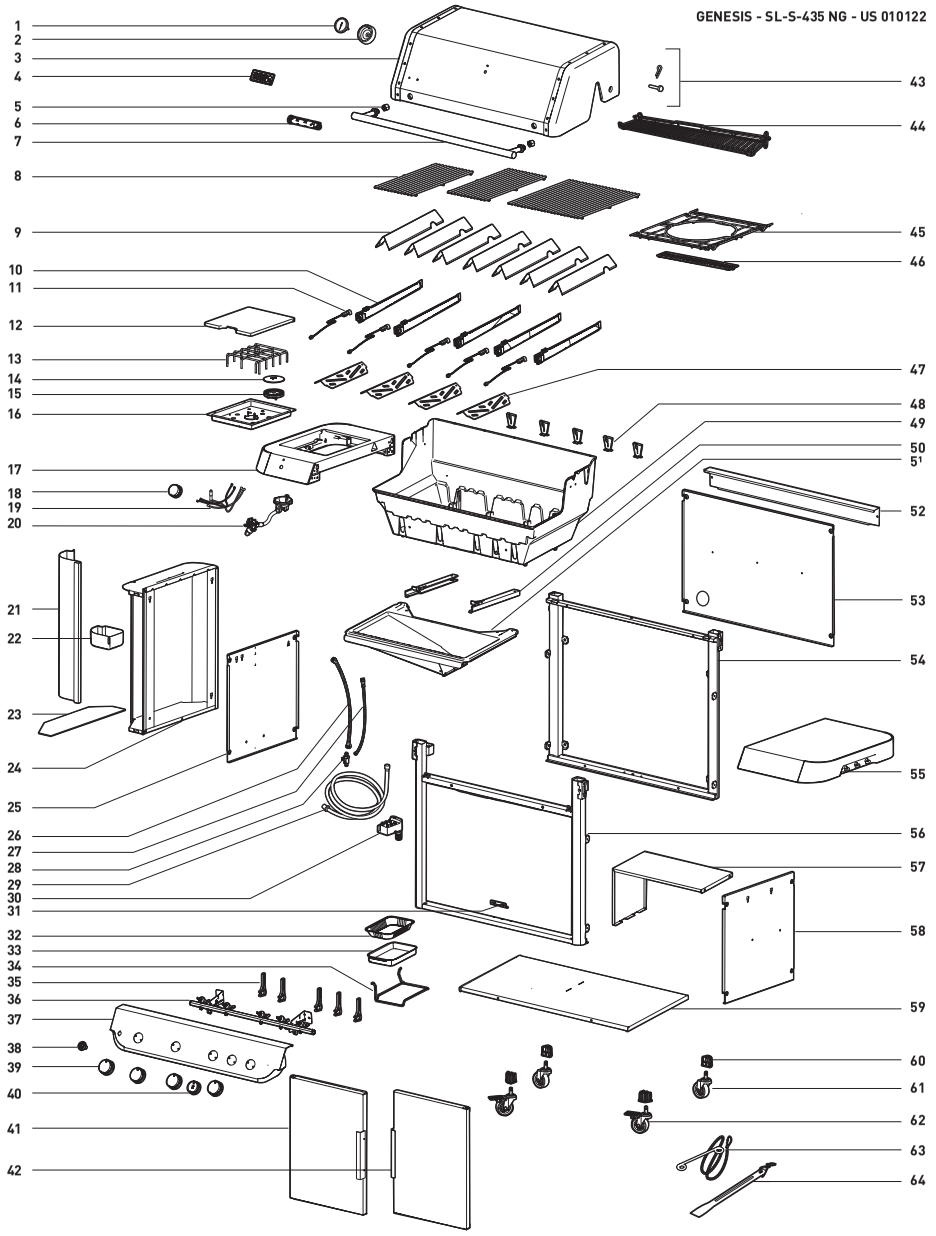

GENESIS SL-S-435

weber.com

U.S.:
1-800-446-1071

Canada:
1-800-446-1071

Mexico:
01 800 0093237

© 2023 Designed and engineered by Weber-Stephen Products LLC, 1415 S. Roselle Road, Palatine, Illinois 60067 USA.